LCD MODULE

SPECIFICATION

Module Size: **12.02 inch 2160RGBx1440**

Spec Part No.: **23040475**

Date : **2016-03-11**

Version : **2.2**

Revision History

Version	Revise Date	Page	Content	Prepared by
1.0	2015-07-21	ALL	First release	Xushuang
2.0	2015-08-10	P4, P5, P6, P11, P12,P13, P26, P28	P4 Revise Module Size P5 Revise Active Area, Gamma Correction, and Gate scan direction. P6~P7 Revise Pin symbol and Pin 28 definition. P11 Revise Power consumption of Panel P12 Revise power consumption of backlight and add Note6. P13 Revise requirement of color coordinate P26 Revise Mechanical Drawing P28 Add remarks on items of Extrusion and Ball Drop Test.	Xushuang
2.1	2015-09-18	P5, P6,P7,P8 ,P12,P13 ,P14,P15 ,P16,P18 ,P20, P27,P28	P5 Revise module weight,dynamic contrast and gamma correction. P5、P6 Revise warpage test item P7、P8 Revise Pin 28 definition and add voltage item. Revise HSYNC、HPD、DBC_EN、BL_PWM_IN、BL_PWM_OUT voltage. P12 Revise LED PWM_OUT voltage. P13 Revise Note5. P14 Revise color uniformity and color coordinate. P15 Revise Note7. P16 Revise Note8. P18 Revise Note12. P20 Revise note 15 P27 Revise Mechanical Drawing P28 Revise LDI 3point bending test item	Liulifeng
2.2	2016-03-11	P15 P28	P15 Revise Color Uniformity: From △u'△ v'-A：max0.012，△u'△ v'-B：max0.004 to △u'△ v'-A：max0.015，△u'△ v'-B：max0.005 P15 Revise Color coordinate:From R（0.6509,0.3302），G（0.2708,0.6632）to R（0.6609,0.3302），G（0.2738,0.6432） P28 Revise Mechanical Drawing	Liulifeng

Table of Contents

1 General Specification 4
1.1 Features 4
2 LCM Specification 4
2.1 Application 4
2.2 General Specification 4
3 Pin Assignments 7
3.1 Display Interface 7
4 Schematic Circuit Diagram 9
4.1 Display Edp1.3 Reference Circuit 9
5 Register &Pixel Data Format 9
5.1 eDP1.3 Data Format 9
6 Timing Characteristics 10
6.1 Power on / off Sequence 10
6.2 eDP1.3 Interface Characteristics 11
7 Electrical Specifications 12
7.1 LCD Typical Operation Conditions 12
7.2 Power Consumption of TFT Panel 12
7.3 Power Consumption of Backlight 12
8 Optical Specifications 13
9 Mechanical Drawing 26
10 Reliability Requirement 27
10.1 General Reliability Requirement 27
10.2 Incoming Inspection Requirement 33
10.3 Module Unit Reliability Test 33

1 General Specification

1.1 Features

1.1.1 LCM Features

-- TFT-LCD Panel with IPS type
-- 2160RGBx1440 Resolution
--Interface eDP 1.3 with PSR
--NTSC 85%
--One backlight with 54pcs RG LED
-- Landscape LCD

2 LCM Specification

2.1 Application

Display module for Portable Terminal

2.2 General Specification

No.	Item		Specification	Unit	Remark
1	**Display Size**		**12.02**	**Inch**	
2	**TFT Technology Type**		**a-Si**		
3	**Liquid Crystal Alignment Method**		**IPS or equivalence**		
4	**Resolution**		**2160*RGB*1440**		
5	**Display mode**		**Transmissive**		
6	**Color Depth**		**16.7M（RGB 24bit）**		
7	**Viewing Direction**		**Full Viewing Angle Min75/Typ80@CR>10**		
8	**Contrast Ratio**		**800 min/1000 typ**		
9	**Luminance**		**380 min/450 typ**	**cd/m^2**	**9point average**
10	**Module Size**	**LCM**	**262.42 (W)*179.55(H)*Max2.25 (T)**	**mm**	**Note 1** **CPK>1.33**
11	**Thickness**		**Panel: 0.2(Typ)/0.2(Typ)**	**mm**	**Note 1**
			Module: Max4.25 (w PCBA)		

12	Panel Active Area	254.016(W)*169.344(H)	mm	Note 1
13	Pixel Size	0.0392(W)*0. 1176(H)	mm	
14	Pixel Pitch	0.1176(W)×0.1176(H)	mm	
15	Pixel Aspect Ratio	1:1		
16	Driver IC	TBD		
17	Light Source	RG LED Backlight		
18	Interface	eDP1.3		
19	Vcom type	DC Vcom		
20	Driver Inversion type	column Inversion or Z Inversion		
21	Operation Temperature	-10~+60	degC	
22	Storage Temperature	-20~+70	degC	
23	Weight	168g(max)	Gram	
24	Pixel Per inch	216	PPI	
25	Pixel Aperture Ratio	TBD	%	
26	Environmental Protection Requirement	RoHS & REACH must be executed		
27	Connection method	ZIF 40Pins		
28	PSR(RAM Size)	Need		
29	Color Enhancement	Need		*Note 4*
30	CABC Function	Need		
31	E-EDID	Implementing an EDID 1.3 or later data structure		
32	Dynamic Contrast	Need		
33	Gamma Correction	Need		
34	Polarizer Type	Hard coat treating	3H	
		Glare		
35	Panel gate scan direction reverse	TBD		
36	warpage	front side value < 0.4mm rear side value < 0.4mm.		*Note 2*, And refer to 1st lot
37	Diagonal Stripes&Morie	Invisible		*Note 3*
38	MBO Function	Need		

Note 1:Please Refer to the mechanical drawing.

Note 2: Warpage inspected by measuring system to analyze surface warpage and module thickness.

[1] Tp side test

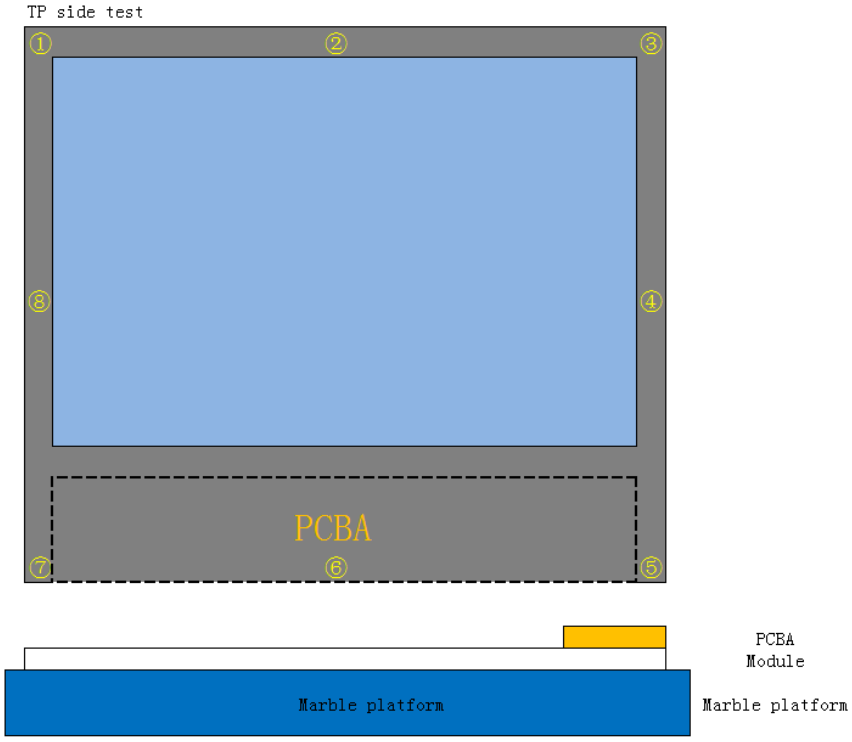

- Remove protect film of TP side,put glass face down on the marble platform as shown in the figure.
- Smooth around bezel tape in order to prevent the bubble impact test.
- Test the warpage of TP side with feeler guage in order of 1,2,3,4,5,6,7,8.

[2] LCD side test

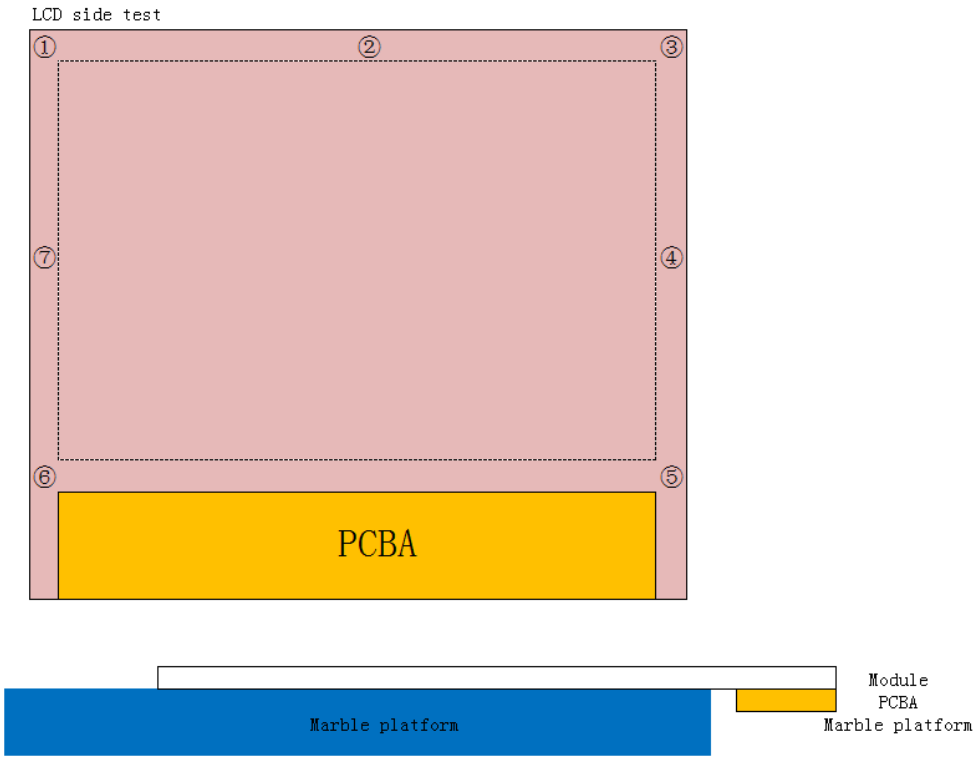

- Remove protect film of both side,put backlight face down on the marble platform as shown in the figure.

- Smooth around bezel tape in order to prevent the bubble impact test.
- Test the warpage of LCD side with feeler guage in order of 1,2,3,4,5,6,7.

Note 3: Viewing distance: 20cm to 25cm.

Viewing angle: θ_L <45 °, θ_R <45 °, ψ_T<45 °, ψ_B<45 °.

The viewing angle Refer to Note 9.

Note 4: The detail test method can refer to the template of HUAWEI Display Validation test report.

3 Pin Assignments

3.1 Display Interface

Pin No.	Symbol	Voltage	Description	I/O
1	VCCS	3.3V	LCD logic and driver power	P
2	VCCS	3.3V	LCD logic and driver power	P
3	VCCS	3.3V	LCD logic and driver power	P
4	HSYNC	3.3V	Horizontal SYNC signal	O
5	ID	3.3V/0V	ID Pin	-
6	BIST	NA	BIST enable	I
7	GND		Ground	P
8	AUX_CH_N	500mV(min)	Complement Signal Auxiliary Channel	I/O
9	AUX_CH_P	1000mV (max)	True Signal Auxiliary Channel	I/O
10	GND		Ground	P
11	Lane0_N	100mV(min)	Complement Signal Link Lane 0	I
12	Lane0_P	1320mV (max)	True Signal Link Lane 0	I
13	GND		Ground	P
14	Lane1_N	100mV(min)	Complement Signal Link Lane 1	I
15	Lane1_P	1320mV (max)	True Signal Link Lane 1	I
16	GND		Ground	P
17	Lane2_N	100mV(min)	Complement Signal Link Lane 2	I
18	Lane2_P	1320mV (max)	True Signal Link Lane 2	I
19	GND		Ground	P
20	Lane3_N	100mV(min)	Complement Signal Link Lane 3	I
21	Lane3_P	1320mV (max)	True Signal Link Lane 3	I

22	GND		Ground	P
23	HPD	3.3V	HPD signal pin	I/O
24	GND		Ground	P
25	WPN	NA	I2C Write Protection	I
26	SCL	NA	I2C CLK	I
27	SDA	NA	I2C SDA	I/O
28	DBC_EN	3.3V/0V	Pull High Enable, Pull Low Disable	I
29	BL_PWM_IN	3.3V	System PWM signal input for dimming	I
30	BL_PWM_OUT	3.3V	Bypass PWMI or TCON output PWM for BL control	O
31	LED_1		Power for LED1 Cathode	P
32	LED_2		Power for LED2 Cathode	P
33	LED_3		Power for LED3 Cathode	P
34	LED_4		Power for LED4 Cathode	P
35	LED_5		Power for LED5 Cathode	P
36	LED_6		Power for LED6 Cathode	P
37	NC		Reserved for LCD manufacturer's use	-
38	BL_VCCS	29V	Power for LED Anode	P
39	BL_VCCS	29V	Power for LED Anode	P
40	BL_VCCS	29V	Power for LED Anode	P

4 Schematic Circuit Diagram

4.1 Display Edp1.3 Reference Circuit

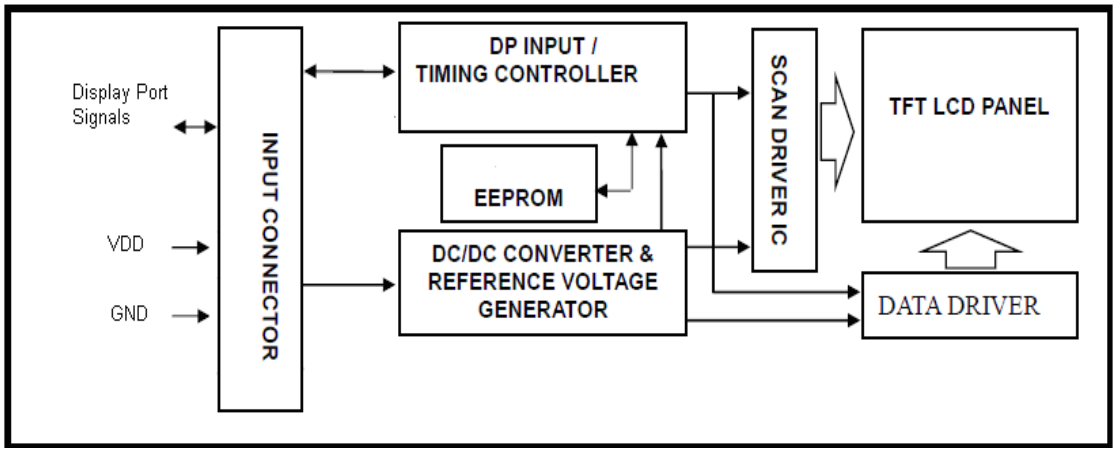

5 Register &Pixel Data Format

5.1 eDP1.3 Data Format

24bpp RGB to a 4-Lane Main Link Mapping

Lane 0	Lane 1	Lane 2	Lane 3
R0-7:0	R1-7:0	R2-7:0	R3-7:0
G0-7:0	G1-7:0	G2-7:0	G3-7:0
B0-7:0	B1-7:0	B2-7:0	B3-7:0
R4-7:0	R5-7:0	R6-7:0	R7-7:0
G4-7:0	G5-7:0	G6-7:0	G7-7:0
B4-7:0	B5-7:0	B6-7:0	B7-7:0
R8-7:0	R9-7:0	R10-7:0	R11-7:0
G8-7:0	G9-7:0	G10-7:0	G11-7:0
B8-7:0	B9-7:0	B10-7:0	B11-7:0

6 Timing Characteristics

6.1 Power on / off Sequence

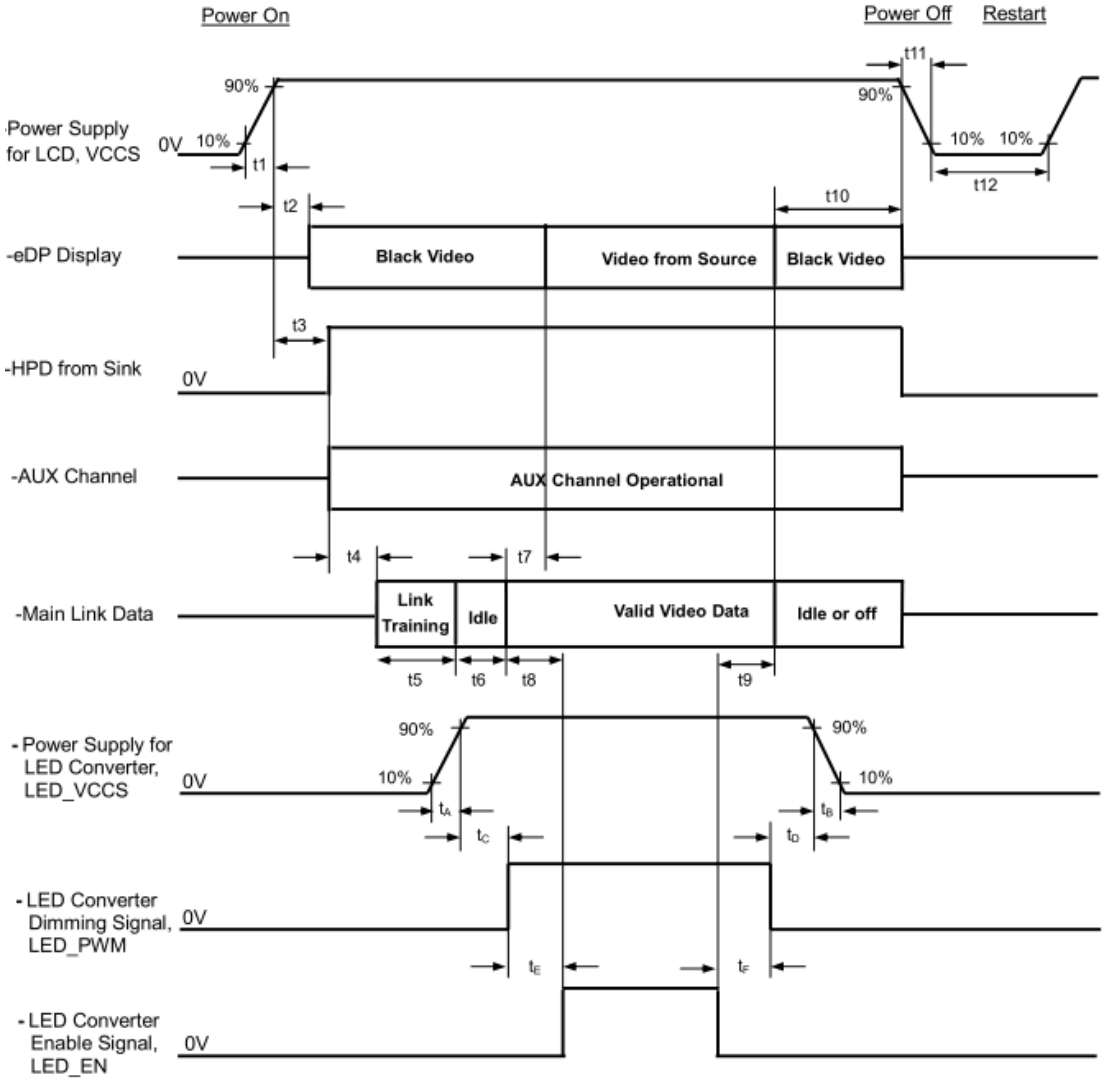

Timing Specifications:

Parameter	Description	Reqd. By	Value		Unit	Notes
			Min	Max		
t1	Power rail rise time, 10% to 90%	Source	0.5	10	ms	-
t2	Delay from LCD,VCCS to black video generation	Sink	0	200	ms	Automatic Black Video generation prevents display noise until valid video data is received from the Source (see Notes:2 and 3 below)
t3	Delay from LCD,VCCS to HPD high	Sink	0	200	ms	Sink AUX Channel must be operational upon HPD high (see Note:4 below)
t4	Delay from HPD high to link training initialization	Source	-	-	ms	Allows for Source to read Link capability and initialize
t5	Link training duration	Source	-	-	ms	Dependant on Source link training protocol
t6	Link idle	Source	-	-	ms	Min Accounts for required BS-Idle pattern. Max allows for Source frame synchronization
t7	Delay from valid video data from Source to video on display	Sink	0	50	ms	Max value allows for Sink to validate video data and timing. At the end of T7, Sink will indicate the detection of valid video data by setting the SINK_STATUS bit to logic 1 (DPCD 00205h, bit 0), and Sink will no longer generate automatic Black Video
t8	Delay from valid video data from Source to backlight on	Source	-	-	ms	Source must assure display video is stable
t9	Delay from backlight off to end of valid video data	Source	-	-	ms	Source must assure backlight is no longer illuminated. At the end of T9, Sink will indicate the detection of no valid video data by setting the SINK_STATUS bit to logic 0 (DPCD 00205h, bit 0), and Sink will automatically display Black Video. (See Notes: 2 and 3 below)
t10	Delay from end of valid video data from Source to power off	Source	0	500	ms	Black video will be displayed after receiving idle or off signals from Source
t11	VCCS power rail fall time, 90% to 10%	Source	0.5	10	ms	-
t12	VCCS Power off time	Source	500	-	ms	-
t_A	LED power rail rise time, 10% to 90%	Source	0.5	10	ms	-
t_B	LED power rail fall time, 90% to 10%	Source	0	10	ms	-

6.2 eDP1.3 Interface Characteristics

support for Panel Self Refresh (PSR)

7 Electrical Specifications

7.1 LCD Typical Operation Conditions

Item		Symbol	Values			Unit	Remark
			Min	Typ	Max		
Power Supply Voltage		**VCCS**	**3.0**	**3.3**	**3.6**	**V**	
Ripple Voltage		**V_{RP}**	**-**	**（50）**	**-**	**mV**	
LED PWM OUT	**High Level**	**VOH**	**3.0**	**3.3**	**3.6**	**V**	
	Low Level	**VOL**	**-**	**-**	**0.495**	**V**	
Frame frequency		**fFrame**	**-**	**60**	**-**	**HZ**	
Hot plug Detect		**HPD**	**-**	**3.3**	**-**	**V**	

7.2 Power Consumption of TFT Panel

Power Supply: Frame Frequency: **F_{frame} =60HZ @ 25degC456**

Display Mode	Item	Symbol	Value		Unit	Remark
			Typ	Max		
Display White	**Current of VCCS**	**I_{VCCS}**	**TBD**	**348**	**mA**	
Display Black	**Current of VCCS**	**I_{VCCS}**	**TBD**	**TBD**	**mA**	
Standby Mode	**Current of VCCS**	**I_{VCCS}**	**TBD**	**TBD**	**mA**	
Worst pattern	**Current of VCCS**	**I_{VCCS}**	**TBD**	**TBD**	**mA**	

7.3 Power Consumption of Backlight

Test Condition : **I_{LED}=21mA RG LED 54PCS**

Warning: **LCM Brightness must match Optical Spec requirement when I_{LED}=21mA**

Backlight Unit Schematic:

Item	Symbol	Value			Unit	Remark
		Min	Typ	Max		
Forward Voltage	**V_{BL}**		TBD	28.8	**V**	**Note 5**
Power Consumption	**P_{BL}**		TBD	3650	**mW**	
LED Quantity		**54**			**pcs**	
LED Rank		**Luminous Flux: TBD**			**lm**	
		Chromaticity:TBD				

Note 5 **: When I_{LED}=21mA，the V_{BL} must be in the range of above table specified.**

The FPC wire resistance between LED+ and LED- must be less than 0.15ohm

P_{BL}= I_{LED}x V_{BL}

Note 6 **: The overall Power consumption of Backlight and Panel is less than 4600mW.**

8 Optical Specifications

Test condition：VCCS =3.3V ,Ta=25℃

Item	Symbol	Condition	Value			Unit	Note
			Min	Typ	Max		
luminance	**Bp**	**θ=0°**	**380**	**450**	**--**	**cd/m²**	**Note 7**
Uniformity	**△Bp**	**Φ=0°**	**75**	**80**	**--**	**%**	**Note 8**
Color Uniformity	**△u'△ v'-A**		**--**	**--**	**0.015**		**Note 26**

		△u'△ v'-B		--	--	0.005		Sign the limit sample shall prevail.
		△E*ab		--	--	NA		
Viewing Angle	Left	θ_L	Cr≥10	75	80	--	deg	Note 9
	Right	θ_R		75	80	--		
	Top	ψ_T		75	80	--		
	Bottom	ψ_B		75	80	--		
Contrast Ratio		Cr	θ=0° Φ=0°	800	1000	--	-	Note 10
Response Time		$T_{r+}T_f$		--	25	35	ms	Note 11
		Tgray		-	45	55	ms	
Color Coordinate of CIE1931	Red	x	θ=0° Φ=0°	Typ-0.03	0.6609	Typ+0.03	-	Note 12
		y		Typ-0.03	0.3302	Typ+0.03		
	Green	x		Typ-0.03	0.2738	Typ+0.03		
		y		Typ-0.03	0.6432	Typ+0.03		
	Blue	x		Typ-0.03	0.1497	Typ+0.03		
		y		Typ-0.03	0.0600	Typ+0.03		
	White	x		0.27	0.30	0.33		
		y		0.28	0.31	0.34		
NTSC Ratio		NTSC	CIE1931	--	85	--	%	Note 13
Color Temperature		CT		-	7500	-		
Flicker		amount	-	-	-	-30	dB	Note 14
Gamma		-		1.9	2.2	2.5		Note 15
Crosstalk		△CT	-	-	1.10	1.20		Note 16
Transmittance @w/o APF		Tm		TBD		--	%	
Reflectance		Rf	@550nm	--		TBD	%	Note 17
Polarization Direction of Front Polarizer		PdF			TBD		deg	Note 18
Polarization Direction of Rear Polarizer		PdR			TBD		deg	
Luminance decrease ratio			θL=30°	---	---	70	%	Note 19
			θR=30°	---	---	70	%	
			ψT=30°	---	---	70	%	
			ψB=30°	---	---	70	%	
Contrast decrease ratio			θL=30°	---	---	70	%	Note 20
			θR=30°	---	---	70	%	
			ψT=30°	---	---	70	%	
			ψB=30°	---	---	70	%	

Color shift		**θL=30°**	---	---	**3**	**JNCD**	**Note 21**
		θR=30°	---	---	**3**	**JNCD**	
		ψT=30°	---	---	**3**	**JNCD**	
		ψB=30°	---	---	**3**	**JNCD**	
Gray inversion angle		**ψ=0°**		**NA**		**deg**	**Note 22**
Sunglass Readability			**NA**				
Afterimage			**3**			**Minute**	**Note 23**
CABC Test							**Note 24**
Hot spot	**△Bp**	**θ=0° Φ=0 °**	**75**	**80**		**%**	**Note25**
		θ=0° Φ=0 °	**80**	**85**		**%**	**Every near 9 points Note25**

Note 7: Luminance measurement

The test condition is at ILED=21mA and measured on the surface of LCD module at 25℃.

- **The data are measured after LEDs are lighted on for more than 5 minutes and LCM displays are fully white. The brightness is the average value of 9 measured spots. Measurement equipment CS2000 or similar equipments (Field of view:1deg,Distance:50cm)**
- **Measuring surroundings: Dark room.**
- **Measuring temperature: Ta=25℃.**
- **Adjust operating voltage to get optimum contrast at the center of the display.**
- **Measured value at the center point of LCD panel must be after more than 5 minutes while backlight turning on.**

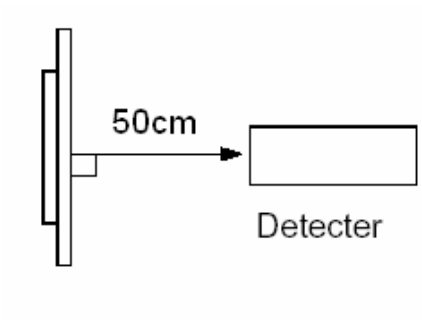

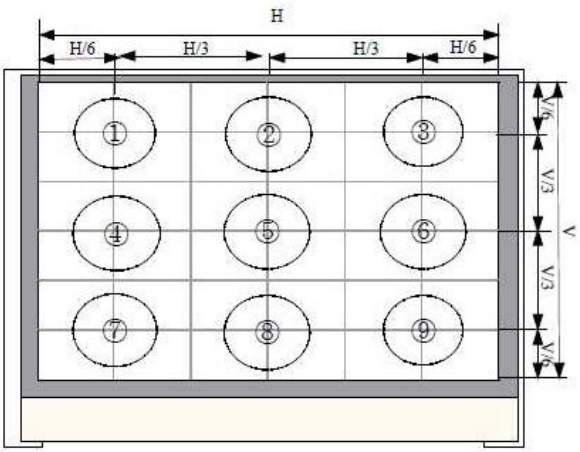

Note 8: Uniformity

- **The test condition is at ILED=21mA and measured on the surface of LCD module at 25℃.**
- **Measurement equipment: CS2000 or similar equipments**
- **The luminance uniformity is calculated by using following formula:**
- **△Bp = Bp (Min.) / Bp (Max.)×100 (%)**
- **Bp (Max.) = Maximum brightness in 13 measured spots**
- **Bp (Min.) = Minimum brightness in 13 measured spots.**

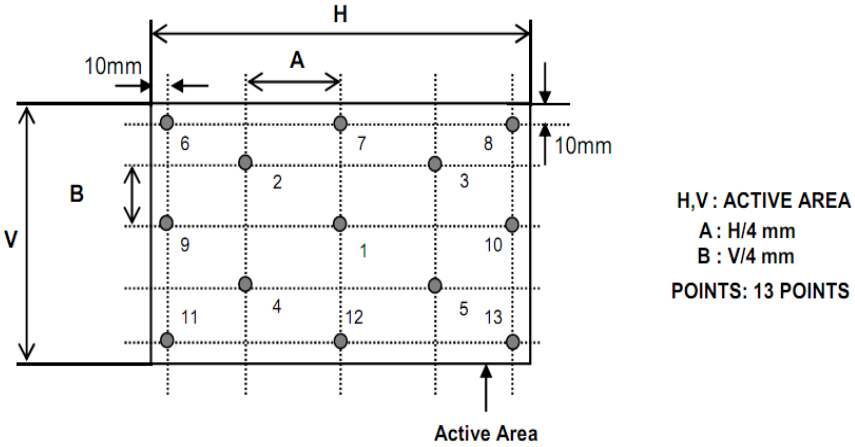

Note 9**:** The definition of Viewing Angle

Refer to the graph below marked by *θ* and *Φ*

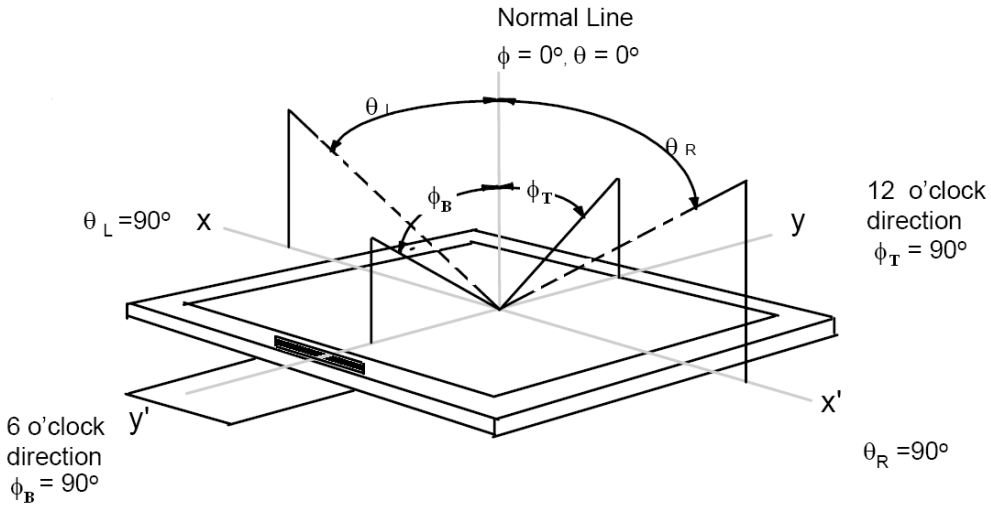

Note 10**:** The definition of Contrast Ratio **(Test LCM using CS2000 or similar equipments):**

$$\textbf{Contrast Ratio(CR)} = \frac{\textbf{Luminance When LCD is at "White" state}}{\textbf{Luminance When LCD is at "Black" state}}$$

(Contrast Ratio is measured in optimum common electrode voltage)

Note 11**:** Definition of Response time. **(Test LCD using DMS501 or similar equipments):**

The output signals of photo detector are measured when the input signals are changed from "black" to "white"(Voltage falling time) and from "white" to "black"(Voltage rising time), respectively. The response time is defined as the time interval between the 10% and 90% of amplitudes.Refer to figure as below.

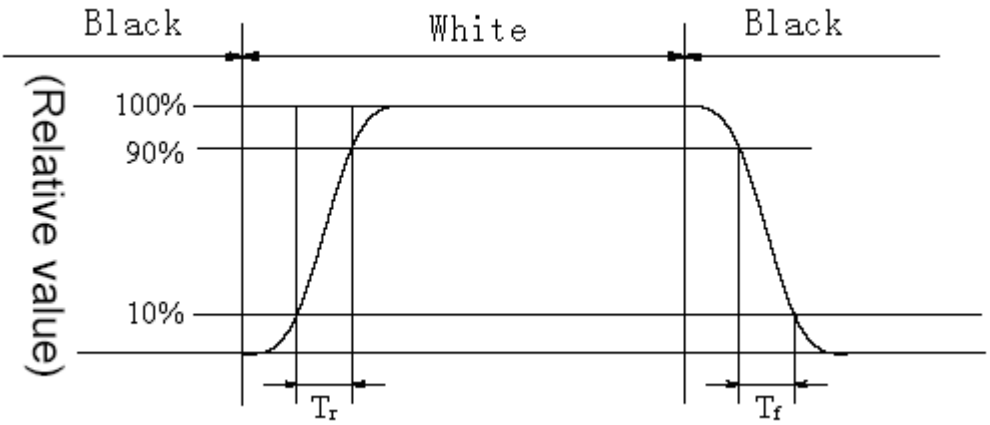

Response time of gray to gray:

- **Measurement equipment: DMS501 or similar equipments.**

- **Test method :we define 8 grays L0-L7, the grays of L0-L7 were defined as:0,36,73, 109, 146, 182, 219, 255. The output signals of photo detector are measured when the input signals are changed from "Lx" to "Ly", x, y= [0, 7]. The response time is defined as the time interval between the 10% and 90% of amplitudes. The result of the test can be noted as below:**

	L0	L1	L2	L3	L4	L5	L6	L7
L0	■							
L1		■						
L2			■					
L3				■				
L4					■			
L5						■		
L6							■	
L7								■

Note 12: Color Coordinates of CIE 1931

- **The test condition is at I_{LED}=21mA and measured on the surface of LCD module at 25℃.**
- **Measurement equipment: CS2000 or similar equipments**
- **The Color Coordinate (CIE 1931) is the measurement of the center of the display shown in below figure.**

Note 13**:** Definition of Color of CIE Coordinate and NTSC Ratio.

$$S = \frac{\text{area of RGB triangle}}{\text{area of NTSC triangle}} \times 100\%$$

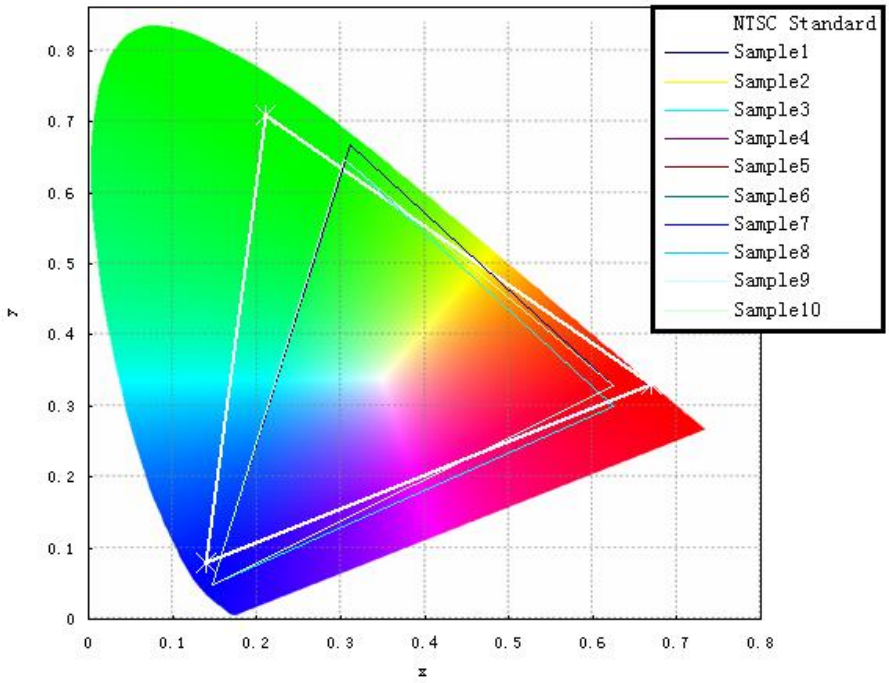

Note 14**:** Flicker

- **Measurement equipment :CA-210 or similar equipments**
- **Measuring temperature: Ta=25℃.**
- **Test method: JEITA method**
- **Test pattern : Refer to below(Test Pattern should be full-fill of display screen)**

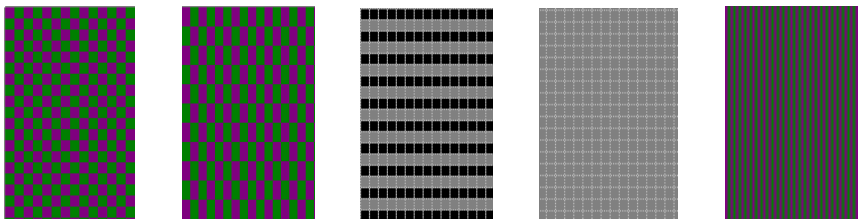

1 Dot Inversion **2 Dot inversion** **Line Inversion** **Frame Inversion** **Column Inversion**

The point should be marked is, for line and frame inversion, the background of Flicker Test Pattern-"gray " are defined as middle gray scale .For example, RGB 24bit "gray" defined as below:

R7	R6	R5	R4	R3	R2	R1	R0	G7	G6	G5	G4	G3	G2	G1	G0	B7	B6	B5	B4	B3	B2	B1	B0
1	0	0	0	0	0	0	0	1	0	0	0	0	0	0	0	1	0	0	0	0	0	0	0

For Dot inversion, the RGB data for first pixel is (127, 0, 127), the RGB data for the second pixel is (0, 127, 0).

- **Frame Frequency Requirement before test: The LCD must be tuned to 60HZ before measurement .**
- **Measurement Point: the center of display active area**
- **Conversion of Flicker ratio:**

  Flicker[dB] = 10xlog[Px/P0]

  Where

Px: Maximum power spectrum of AC component after passing through integrator
P0:Power spectrum of DC component after passing through integrator
AC component=b (Refer to below diagram)
DC component=a (Refer to below diagram)

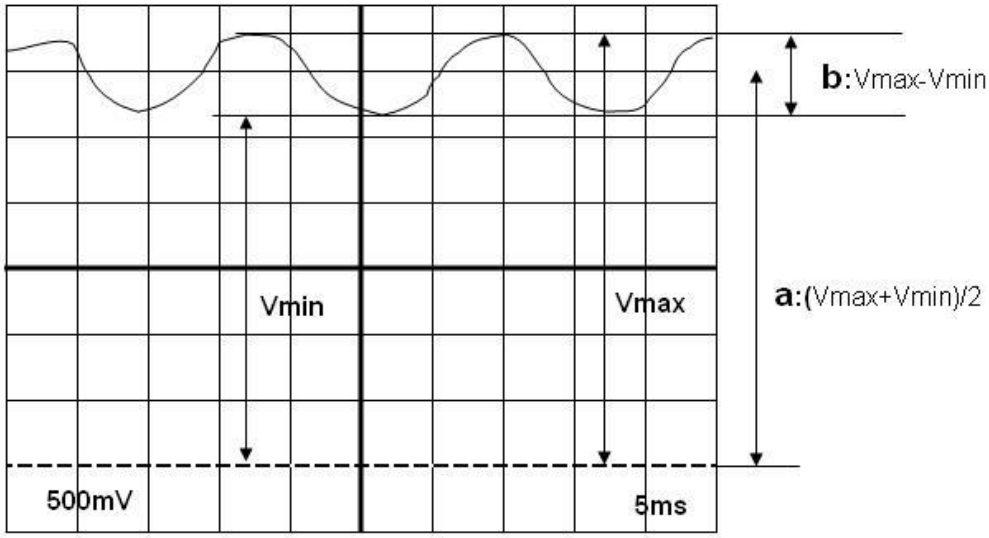

Note 15: gamma curve control

- **For gamma curve control, HUAWEI's request as below:**

- **The whole curve's tolerance must control within +/-0.3, HUAWEI will test the gray scale below:**
  0, 4, 8, …, 248, 252,255, total 65 pictures

Note 16**:** Crosstalk

- **There should be no visible cross-talk in normal direction of the display when the two "Cross-talk Test Patterns " below are loaded.**
- **Measurement equipment: CS2000 or similar equipments**
- **The point should be marked is, the background of Cross-talk Test Pattern-"gray " are defined as middle gray scale . For example, RGB 24bit "gray" defined as below:**

R7	R6	R5	R4	R3	R2	R1	R0	G7	G6	G5	G4	G3	G2	G1	G0	B7	B6	B5	B4	B3	B2	B1	B0
1	0	0	0	0	0	0	0	1	0	0	0	0	0	0	0	1	0	0	0	0	0	0	0

- **△Bpn = Bpn (gray) / Bpn (white)**
  Which n means the dot No. In the Cross-talk Test Pattern ;
  Bpn (gray) means the brightness of the No.n spots in Cross-talk Test Pattern;
  Bpn (white) means the brightness of the No.n spots in Full white Test Pattern;
- **△Bp (Max.) = Maximum value in △Bp1~△Bp9, except the No. 5 spot.**
- **△Bp (Min.) = Minimum value in △Bp1~△Bp9, except the No.5 spot.**
- **△CT=△Bp (Max.)/ △Bp(Min.).**
- **△CT must be less than 1.20**

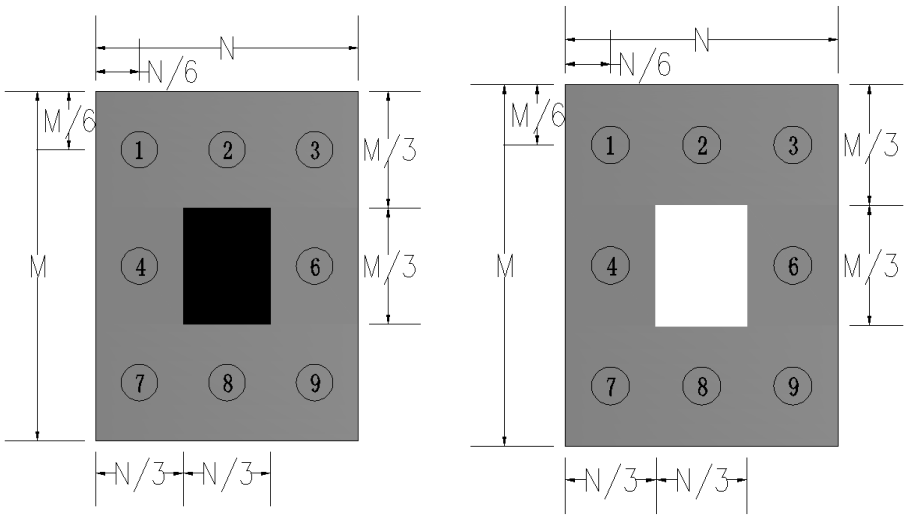

Cross-talk Test Pattern

Note 17: Reflectance Ratio

- **Measurement equipment : X-rite SP64**
- **Measurement parameter：Reflectance Ratio @550nm**

Note 18: Polarization Direction Definition

- **Viewing direction is normal user viewing direction which is vertical to the display surface**
- **The polarizer which is closer to viewer is defined as Front Polarizer**
- **The polarizer which is on the rear side of viewer is defined as Rear Polarizer**
- **The X axis is defined as parallel line to top&bottom sidelines of the Active Area**
- **PdF which is marked in blue arrow is polarization degree of Front polarizer**
- **PdB which is marked in red arrow is polarization degree of Back polarizer**
- **The polarization degree parameter must be indicated in range of 0deg to 180deg according to above definition**

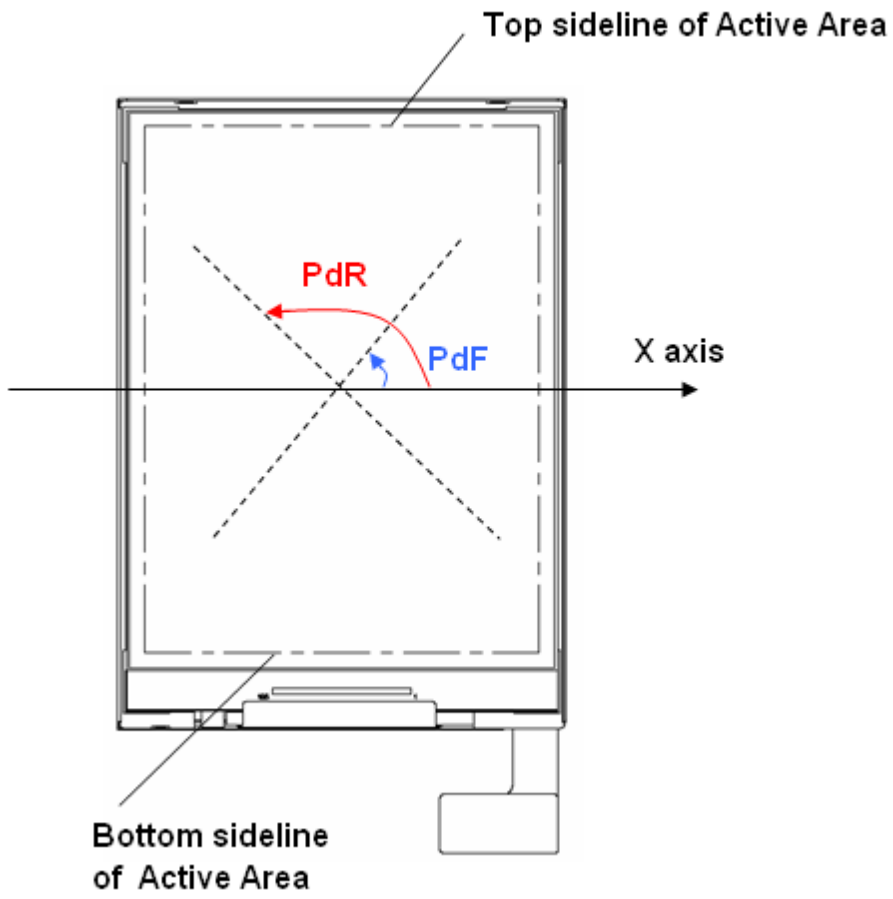

Polarization Definition

Note 19**:** Definition of Luminance decrease ratio

- **Refer to the graph of note 9.**
- **Test pattern : Full White**
- **The luminance decrease ratio is calculated by using following formula:**

$$\textbf{Luminance decrease Ratio}=1-\frac{\textbf{Luminance test at } \theta_L/\theta_R/\psi_T/\psi_B=30^\circ}{\textbf{Luminance test at } \theta_L/\theta_R/\psi_T/\psi_B=0^\circ}$$

Note 20**:** Definition of Contrast decrease ratio

- **Refer to the graph of note 9.**
- **Using contrast test method.**
- **The contrast decrease ratio is calculated by using following formula:**

$$\textbf{Contrast decrease Ratio}=1-\frac{\textbf{Contrast test at } \theta_L/\theta_R/\psi_T/\psi_B=30^\circ}{\textbf{Contrast test at } \theta_L/\theta_R/\psi_T/\psi_B=0^\circ}$$

Note21: Color Shift JNCD

- **For JNCD measure:**
- **Fix on one pattern like white pattern,**

- **On the condition θ=0 F=0°, we can get the color coordinate (u1', v1') and onθL=30° we can get another color coordinate (u2', v2')**
- **Delta = Square Root((u2' - u1')^2 + (v2' - v1')^2)**
- **JNCD stands for "Just Noticeable Color Difference"**
- **For the (u', v') color space JNCD=0.0040.**
- **2JNCD means Delta u'v'<0.0080**
- **For color shift we need to measure white/red/green/blue pattern.**
- **This Requirement is from our customer and we have test some of our phone display and the result is OK.**

Note 22**:** Definition of gray inversion angle

- **Refer to the graph of note 9.**
- **Using luminance test method.**
- **Test pattern : 128 gray**
- **If the viewing direction is 12 o'clock ,then test the luminance while θ=-60 °, θ=-50 °, θ=-40 °, θ=-30 °, θ=-20 °, θ=-10 °, θ=0 °, θ=10 °, θ=20 °, θ=30 °, θ=40 °, θ=-50 °, θ=60 °. The luminance test as figure below:**

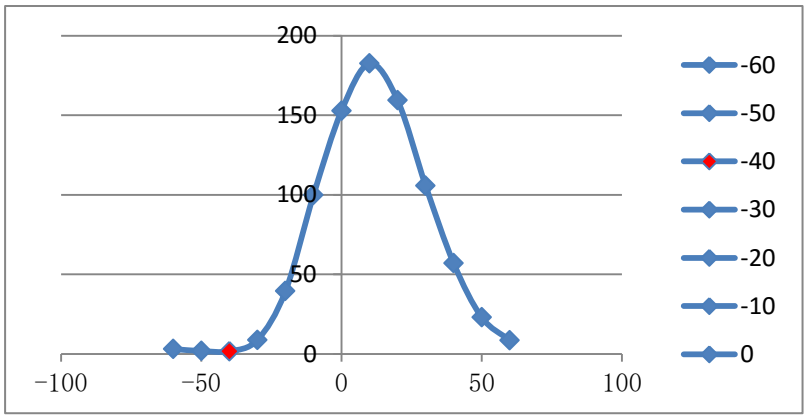

The minimum luminance should not happen in |θ|<40 °.

Note 23**:** Afterimage judgement

- **Power on the LCD 1 hour at tessellated picture(8*8)，then switch to 128 gray picture or Flicker picture, if the afterimage can't be seen within 3 minutes, the LCD is OK.**

Note 24**:** CABC Test

- **Measurement equipment :CS-2000 or similar equipments**
- **Testing picture: CABC Brightness-Gray and APL FIX gamma test picture.**

Test method:

- **Power on LCD, test Brightness-Gray picture, drawing the brightness-gray curve, confirm save the power's scale.**
- **Test APL FIX gamma picture, drawing the APL FIX gamma curve, assurance the curve is smooth.**

Note 25: Hot spot Test

- **(Based on VESA-2.0-306-1)**

- **Equipment used by: Imaging Photometer system**
- **The goal of this measurement is to evaluate the uniformity of between the worst case bright and dark spots found along the LED launching area of the module.**

1. **The backlight is to be measured ad the module level, using the drive circuit contained on the LCD module or the recommended circuit.**
2. **The backlight shall be allowed to warm up for 1 minute for this test.**
3. **The display shall be driven with all white pixels with the contrast set to optimal.**
4. **The luminance shall be measured directly in front of the LEDs("Hot areas") and directly between the LEDs("Dark areas") along the launching area edge of the panel. The measurement spot size of the "hot" and "dark" locations shall be 5mm in diameter.**
5. **Hot Spot uniformity is defined as:**

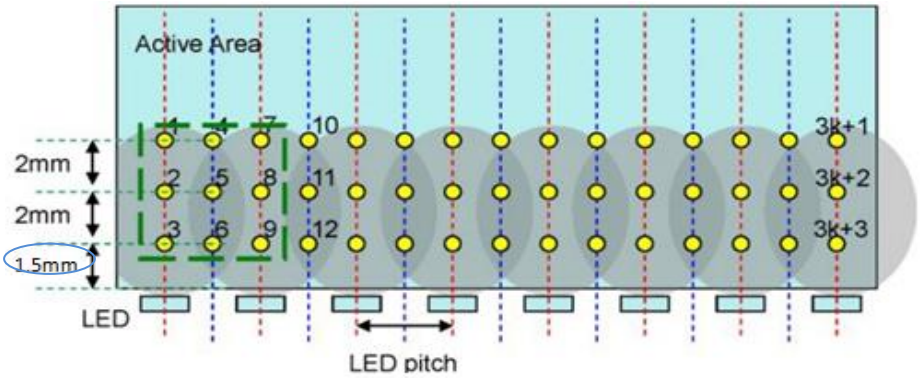

- **Hot spot uniformity=L Min/L Max**

- **Every near 9 points define**

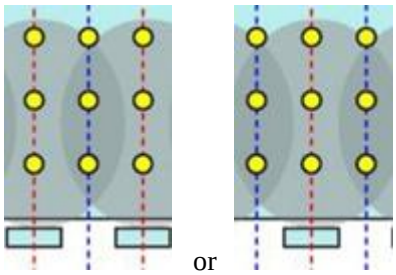

Note 26 Color uniformity

- Measurement Conditions

Recommended measuring equipment for color is ICPMI16 Colorimeter or similar CCD type equipment.

The optical characteristics are determined after the unit has been 'ON' and stable at the following conditions:

Maximum brightness

Dark environment

Ambient temperature at 25℃ ±2℃

- Optical measurement system

Color Measurement

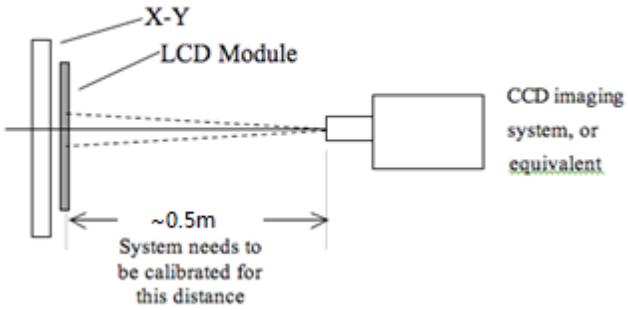

- Total 187 measure points should set as shown in the following figures. The CIE 1976 Standards shall be used.
- The color difference is calculated by using following formula:

Max（△u'v'-A）（the max △u'v' value between two random point of 187 point）

Max（△u'v'-B）（the max △u'v' value between two adjacent point in column and row of 187point）

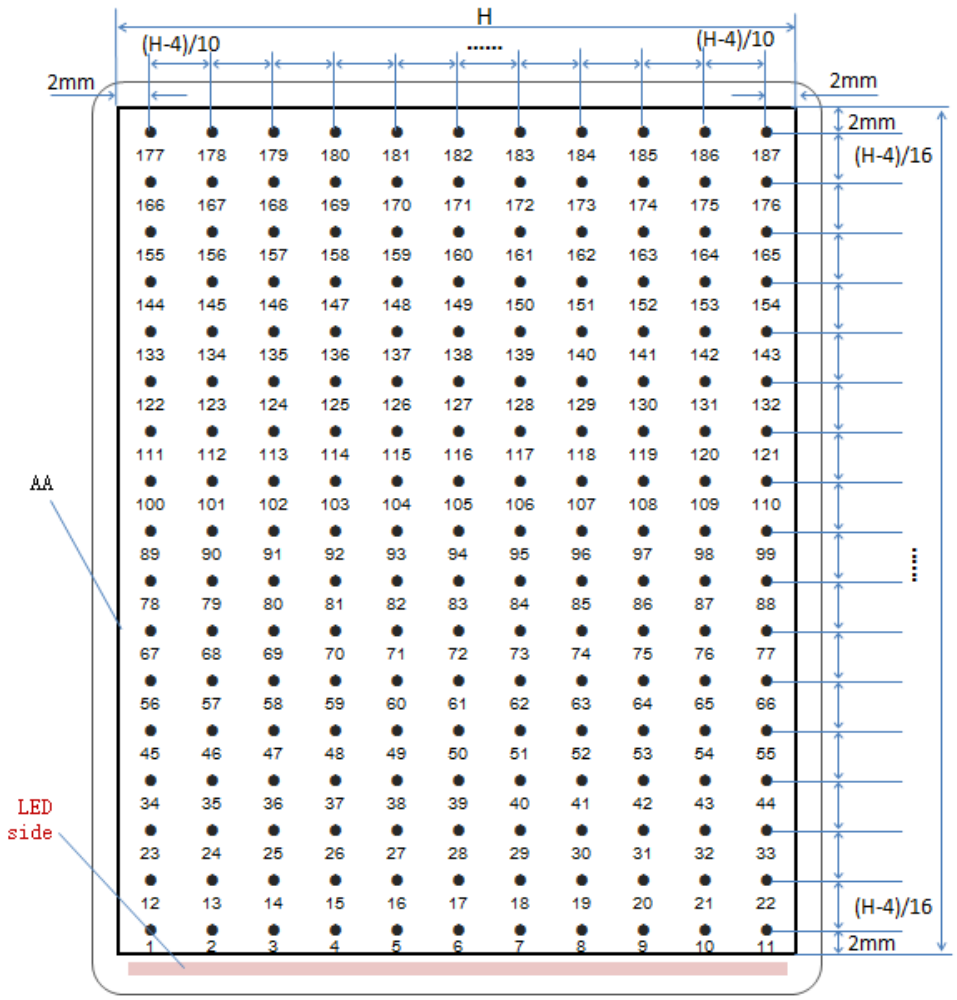

9 Mechanical Drawing

Drawing Attachment:(The drawing file will be sent by Huawei Additionally)

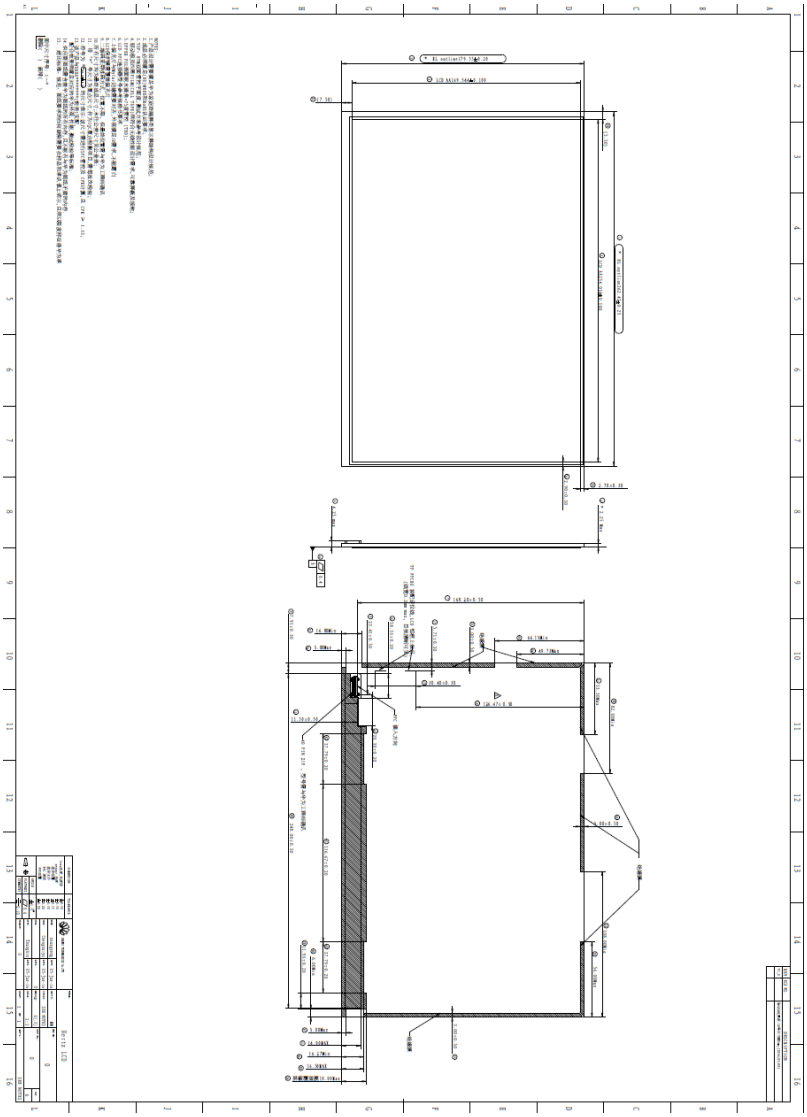

hertz-lcd-v1_0-20160105.dxf hertz-lcd-V1_0-20160105.pdf

10 Reliability Requirement

10.1General Reliability Requirement

Test item	Test condition	No. of failures /No. of examinations
Low temperature storage test	Ta= -20 ℃, 240h, Recovery Time 2 Hrs.	0/10
High temperature storage test	Ta= 70 ℃, 240h, Recovery Time 2 Hrs.	0/10
Low temperature operation test	Ta= -10 ℃, 240h, Recovery Time 2 Hrs.	0/10
High temperature operation test	Ta= 60 ℃, 240h, Recovery Time 2 Hrs.	0/10
High temperature & High humidity operation test	Ta= 50 ℃, 90%RH, 240h, Recovery Time 2 Hrs.	0/10
Thermal Shock	(-20℃ 30min) → (70℃ 30min)]/cycle, 100cycles, Transfer time less than 5 Mins. Recovery Time 2 Hrs.	0/10
LDI (IC) 3point Bending Test	（1） IC length≥20,Span16, （2） IC length<20,Span10, diameter 3mm, Test speed is 1mm/min . stress B10≥350MPa	30pcs
LCD FPC Pull out force measurement	≥7N/cm 90° Peeling test speed 5cm/min.	3
High temperature & High humidity operation test，Just for function, ignore cosmetic	Ta= 60 ℃, 90%RH, 240h, Recovery Time 2Hrs.	0/32
Thermal Shock **Just for function, ignore cosmetic**	(-30℃ 30min) → (70℃ 30min)]/cycle, 160cycles, Transfer time less than 5 Mins. Recovery Time 2 Hrs.	0/32

Panel（without polarizer）4PB Test	Span 60/120, diameter 3mm, Test speed:10mm/min Strain B10≥1500 μ Strain Stress B10≥100MPa (as reference) Shape parameter≥4 (as reference)	30pcs for upward and downward side in length direction 10pcs for upward and downward side in width direction
Extrusion Test	4.5kgf with steel sphere Φ10 Diameter, Test Speed: 5mm/min, Test Points: the center point and four corners.	0/3 Ignore white spot of Backlight.
Steel Ball Drop Test	Steel Ball: Φ25mm, mass: 65g. Drop height: 4 cm. Test position: LCD center, 1 drop.	0/3 Ignore white spot of Backlight.
Electrostatic discharge test (Unpowered)	1500ohm,100pF Contact:+/-2KV Air：+/-6KV	0/10(5pcs per condition)
Electrostatic discharge test (Powered)	330ohm,150pf Contact:+/-6KV Air：+/-6KV	0/10(5pcs per condition)

Note: Vendors and Huawei should reach an agreement on items marked in red before quotation**.**

Note 27:

- Extrusion Test

Test Requirements

Use steel sphere pressing head with Φ10 Diameter to push the LCM display area with 4.5kgf ; Test Speed: 5mm/min, Test Points could be the center point and anyone of the corners.

Sample quantity : 3pcs

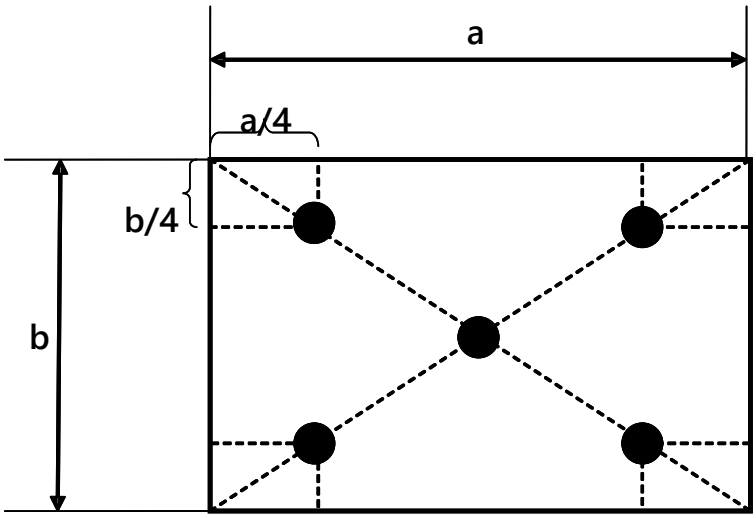

Fig 4-3 Extrusion Position on LCD

Procedure

Before the test the sample are checked to ensure the appearance and function is normal.

Use steel sphere pressing head with Φ10 Diameter to push the LCM display area with 4.5kgf ;

Test Speed: 5mm/min, Test Points could be the center point and anyone of the corners.

Acceptance Criteria

LCD display normally without crack or broken. Display abnormity that can recover after 2 hours automatically could be accepted.

Notes

The flatness of the LCM has to be ensured through LCD back position post before the test.

Test Platform : Steel platform.

- Steel Ball Drop Test

Test Requirements

Steel Ball : Φ25mm, mass: 65g ; Drop height: 4 cm ; Test position: LCD center, 1 drop ; Sample quantity: 3 pcs.

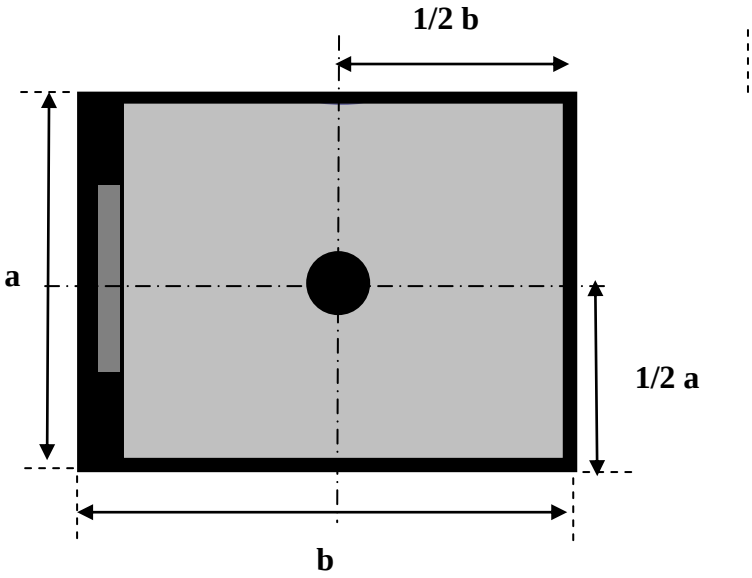

Fig 4-4 Steel ball drop position on LCD

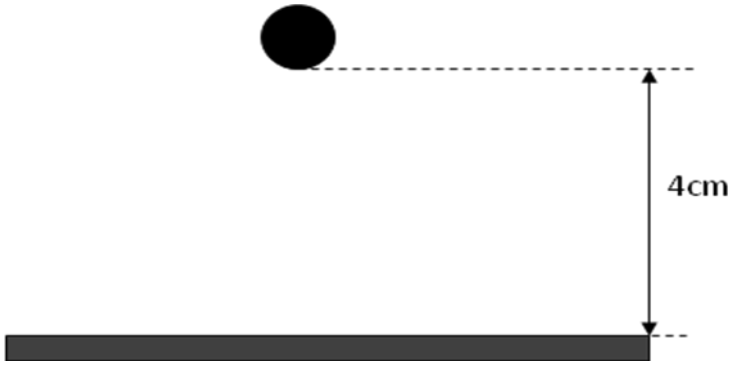

Fig 4-5 Steel ball drop height on LCD

Procedure

Before the test the sample are checked to ensure the appearance and function is normal.

Fix the LCD on the horizontal table and keep it facing up.

Using a Φ35 cylinder to control the ball whose mass is 65g and whose diameter is 25mm dropping freely from 4 cm height. The ball must drop on the appointed point of the LCD.

Check the LCD mechanical and electronic performance after each drop .

Acceptance Criteria

LCD must display normal, no crack and no broken. Display abnormity that can recover after 2 hours automatically could be accepted.

Table-board must be steel.

Notes

Before the drop, positing post on the backside of LCD must be sliced off so as the flatness of the LCM can be ensured.

- ➢ Electrostatic discharge test Requirement :
- ■ Unpowered mode test

Discharge module choose 100pF+1500ohm module

Including FPC pin, IC surface, Panel surface gap etc. electrostatic sensitive parts. The metal part priority use of contact discharge, air discharge on non metallic part, discharge mode corresponding to specific discharge points refer to table 1.

Each of the discharge point of each polarity is at least 10 times, to use static brush discharge on LCD monomer on the ground each time before the discharge, to ensure that each discharge for single discharge.

Contact discharge, according to the LCD pin test requires the supplier to provide the pin extraction tool, pin extension tool requirements directly to the FPC pin connector, All other pins (signal, power supply) through approximate straight line after line extension. Keep hanging, the test point is the end. The pilot diameter shall not exceed 2.5mm. In a corner of the gusset plate, LCD ground wire is connected to the discharge gun ground, LCD wire shall not be overlapped with other earth.

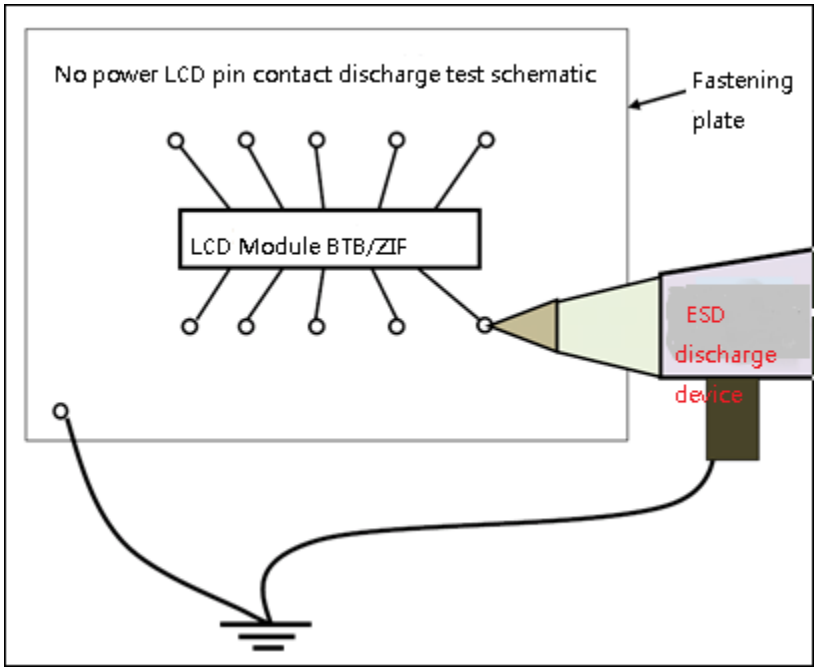

contact discharge method for LCD unpowered mode

The air discharge should apply on the gap and the surface of the IC for Panel, Directly to the LCD ,which should put on the insulation pad test, The air discharge requires that electrostatic discharge gun head vertical slot surface, electrostatic discharge should apply for sensitive points, Electrostatic gun perpendicular to the Panel surface. With Metal frame should choose the gap of

iron frame and glass, and without Metal frame, should choose the gap of LCM. The detail discharge method shown as followed

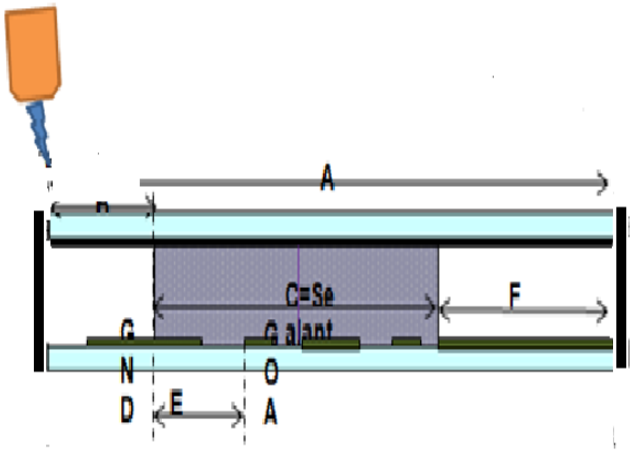

Discharge method for LCD with metal frame

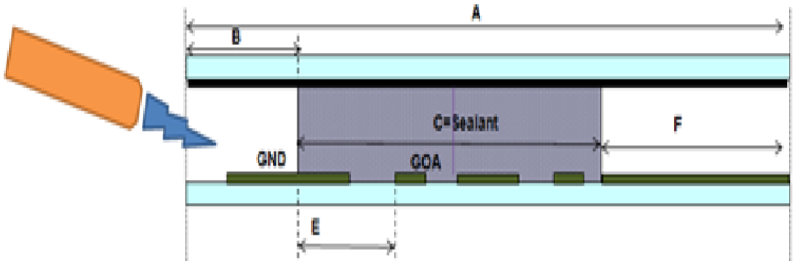

Discharge method for LCD without metal frame

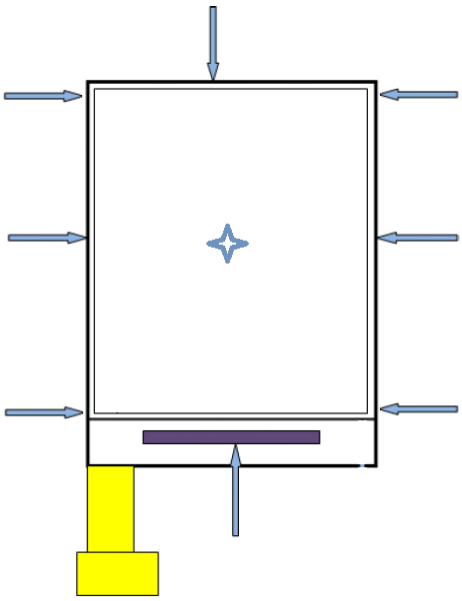

Discharge points for LCD unpowered mode

- Powered mode test method

Discharge module choose 150pF+330ohm module

The test conditions mainly include grounded and ungrounded. Both two conditions should be tested. Grounded condition should requires that grounded though carrier board earth, not LCD ground directly to the earth.

Every discharge point, each polarity should apply at least 10 times, before each discharge should use a grounded brush discharge the remaining charge, to make sure each time is single discharge. Discharge points can refer unpowered mode.

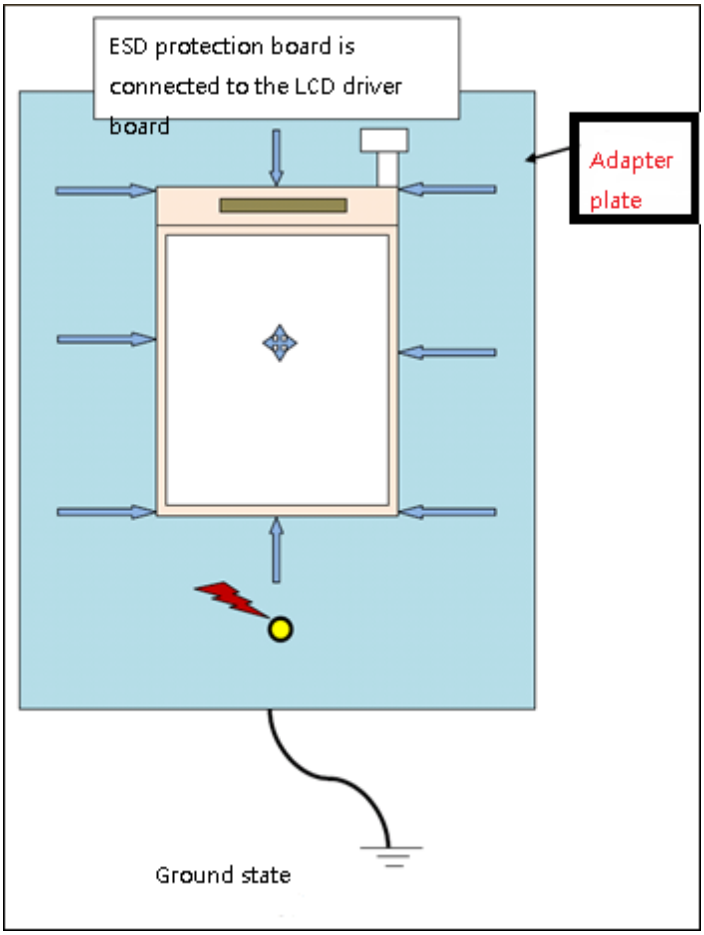

LCD module Power-on ground state Discharge Test Schematic

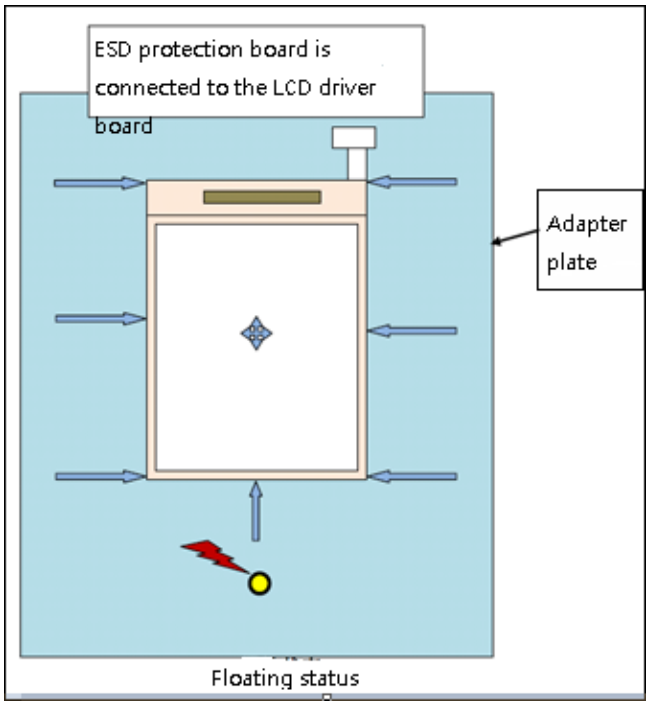

LCD module power-on floating state Discharge Test Schematic

LCD module ESD test requirements

	Test mode	Discharge method	Level	Times	criteria	Notes
LCD	Unpowered	Contact	±2kV	10	C	
		Air	±4kV	10	C	
			±6kV	10	C	Except IC
	Powered	Contact	±4kV	10	B	
			±6kV	10	B	Only to carrier board ground
		Air	±4kV	10	B	
			±6kV	10	C	Except IC

10.2Incoming Inspection Requirement

Refer to:

1,“终端_显示屏幕来料通用检验标准-V5_0 (平板 A 级)”

2,“终端显示和触摸屏来料包装工艺及可靠性规范-V1_0”

10.3Module Unit Reliability Test

Refer to “家庭终端平板显示屏单体认证技术规范 V1.0”

备注：本文档中针对引用标准与规格书重复项目，以规格书内容为准

增加以下首批在线老化测试：

目的：

用于验证器件量产前批量老化稳定性，涉及新器件开发、新材料、新工艺的导入稳

定性及风险，避免批量的提早发现及预防。确保首批量产或者有重大工艺、产线变动情况下生产的器件不出现大规模批量问题，需要将在线老化经验推广。

试验条件:

温湿度：50℃，无湿度要求

电性： 加电测试

测试画面：黑、白、64 级灰度、白背景下红绿蓝三色宽带条

老化时间：8 个小时

测试数量：5,000PCS

实施触发条件

涉及到新开发屏幕首批交货，新工艺，新技术，新供应商，新工厂，转厂等都需要安排首批 5K 的老化测试；

合格判据

试验后回温 2 小时后检查，显示屏外观、显示功能正常，不允许出现新的缺陷

End.