NV133FHM-N52

Preliminary Product Specification

Rev. P0

CHONGQING BOE OPTOELECTRONICS TECHNOLOGY CO.,LTD

REVISION HISTORY

REV.	ECN No.	DESCRIPTION OF CHANGES	DATE	PREPARED
P0	-	Initial Release		

Contents

1.0 General Description

1.1 Application

- Notebook PC Without Touch function

1.2 General Specification

1.2.1.General LCM Specification(Table 1.)

<Table 1. General Specifications>

Parameter	Specification	Unit	Remarks
Active area	293.76 (H) x 165.24 (V)	mm	
Number of pixels	1920 (H) x 1080 (V)	pixels	
Pixel pitch	0.153 (H) x 0.153 (V)	mm	
Pixel arrangement	RGB Vertical stripe		
Display colors	262K	colors	
Display mode	Normally Black		
Dimensional outline	300.26(H)*188.25(V) (W/PCB)*2.4(Max) 300.26(H)*177.39(V)*2.4(Max)	mm	
Weight	215(max)	g	
Back-light	Lower Down side, 1-LED Lighting Bar type		Note 1
Power consumption	P_D : 0.92 (max)	W	@mosaic pattern
	P_{BL} :2.9(max.)	W	
	3.82(Type.)	W	

Notes : 1. LED Lighting Bar (36*LED Array)

2.0 ABSOLUTE MAXIMUM RATINGS

The followings are maximum values which, if exceed, may cause faulty operation or damage to the unit. The operational and non-operational maximum voltage and current values are listed in Table 2.

< Table 2. Absolute Maximum Ratings> Ta=25+/-2°C

Parameter	Symbol	Min.	Max.	Unit	Remarks
Power Supply Voltage	V_{DD}	-0.5	4.0	V	Note 1
Logic Supply Voltage	V_{IN}	V_{ss}-0.3	V_{DD}+0.3	V	
Operating Temperature	T_{OP}	0	+50	℃	Note 2
Storage Temperature	T_{ST}	-20	+60	℃	

Notes : 1. Permanent damage to the device may occur if maximum values are exceeded functional operation should be restricted to the condition described under normal operating conditions.

2. Temperature and relative humidity range are shown in the figure below.
95 % RH Max. (40 ^{O}C ≥ Ta)
Maximum wet - bulb temperature at 39 ^{O}C or less. (Ta > 40 ^{O}C) No condensation.

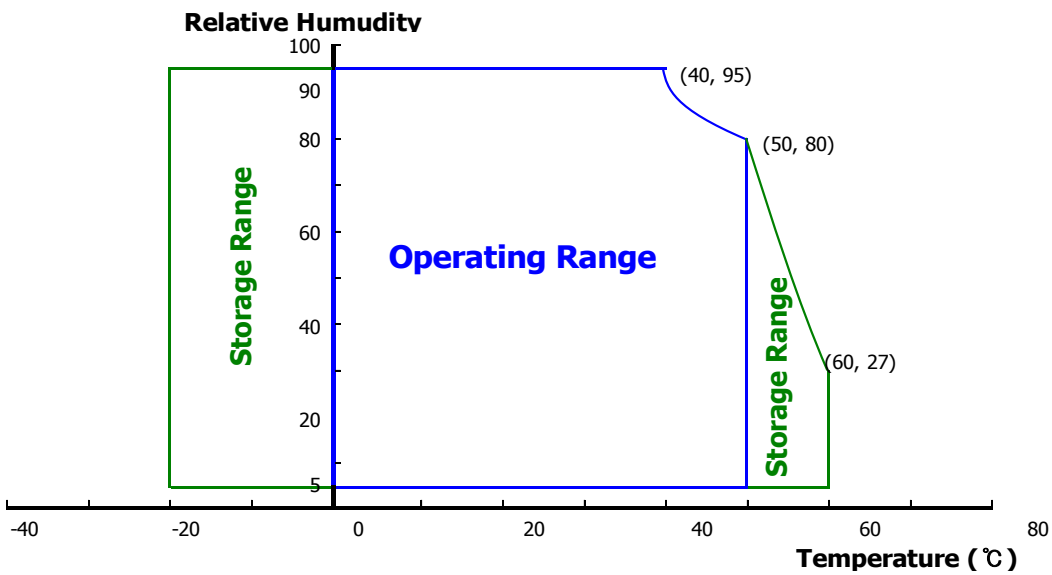

3.0 ELECTRICAL SPECIFICATIONS

3.1 Electrical Specifications

< Table 3. Electrical specifications > Ta=25+/-2°C

Parameter		Min.	Typ.	Max.	Unit	Remarks
Power Supply Voltage	V_{DD}	3.0	3.3	3.6	V	Note 1
Permissible Input Ripple Voltage	V_{RF}	-	-	100	mV	At V_{DD} = 3.3V
Power Supply Current	I_{DD}	-	300	-	mA	Note 1
Differential Input Voltage	V_{ID}	120	-	1320	mV	
Power Consumption	P_D	-	0.92	-	W	Note 1
	P_{BL}	-	2.9	-	W	Note 2
	P_{total}	-	3.82	-	W	

Notes : 1. The supply voltage is measured and specified at the interface connector of LCM.
The current draw and power consumption specified is for 3.3V at 25℃.
a) Typ : Mosaic Pattern
b) Max : Skip sub pixel255

2. $I_F \times V_F \times 36$/ efficiency = P_{LED}

3.2 Backlight Unit

< Table 4. LED Driving guideline specifications >

Ta=25+/-2°C

Parameter			Min.	Typ.	Max.	Unit	Remarks
LED Forward Voltage		V_F	-	-	2.9	V	-
LED Forward Current		I_F	-	23.5	-	mA	-
LED Power Consumption		P_{LED}		2.7	-	W	Note 1
LED Life-Time		N/A	15,000	-	-	Hour	I_F = 22.8mA
Power supply voltage for LED Driver		V_{LED}	6	12	21	V	
EN Control Level	Backlight on		2.0		5.0	V	
	Backlight off		0		1.0	V	
PWM Control Level	PWM High Level		2.0		5.0	V	
	PWM Low Level		0		0.1	V	
PWM Control Frequency		F_{PWM}	200	-	10,000	Hz	
Duty Ratio		-	1	-	100	%	

Notes : 1. Power supply voltage12V for LED Driver
Calculator Value for reference $I_F \times V_F \times 36$/ efficiency = P_{LED}
2. The LED Life-time define as the estimated time to 50% degradation of initial luminous.
3. 1% duty cycle is achievable with a dimming frequency less than 1KHz.

3.3 LED structure

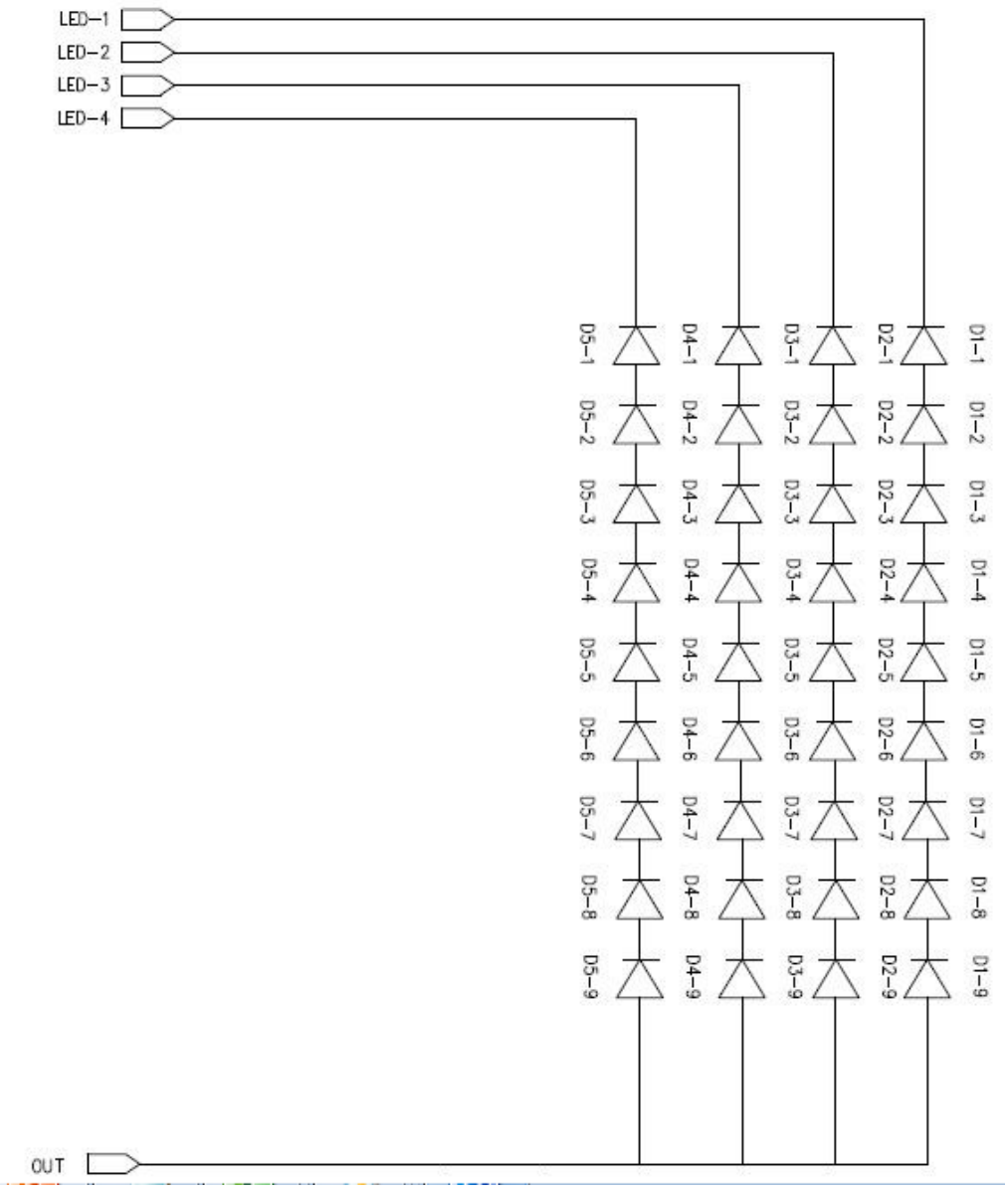

4.0 OPTICAL SPECIFICATION

4.1 Overview

The test of Optical specifications shall be measured in a dark room (ambient luminance ≤ 1 lux and temperature = 25±2℃) with the equipment of Luminance meter system (Goniometer system and TOPCON BM-5) and test unit shall be located at an approximate distance 50cm from the LCD surface at a viewing angle of θ and Φ equal to 0°. We refer to θØ=0 (=θ3) as the 3 o'clock direction (the "right"), θØ=90 (= θ12) as the 12 o'clock direction ("upward"), θØ=180 (= θ9) as the 9 o'clock direction ("left") and θØ=270(= θ6) as the 6 o'clock direction ("bottom"). While scanning θand/or Ø, the center of the measuring spot on the Display surface shall stay fixed. The backlight should be operating for 30 minutes prior to measurement. VDD shall be 3.3+/- 0.3V at 25°C. Optimum viewing angle direction is 6 'clock.

4.2 Optical Specifications

<Table 5. Optical Specifications>

Parameter		Symbol	Condition	Min.	Typ.	Max.	Unit	Remark
Viewing Angle range	Horizontal	Θ_3	CR > 10	-	85	-	Deg.	Note 1
		Θ_9		-	85	-	Deg.	
	Vertical	Θ_{12}		-	85	-	Deg.	
		Θ_6		-	85	-	Deg.	
Luminance Contrast ratio		CR	Θ = 0°	600	800	-	-	
Luminance of White	5 Points	Y_w	Θ = 0° I_{LED} = 23.5mA	-	300	-	-	
White Luminance uniformity	5 Points	ΔY5		-	80%	-	-	Type.
	13 Points	ΔY13		-	60%	-	-	
White Chromaticity		x_w	Θ = 0°	0.283	0.302	0.343	-	
		y_w		0.299	0.334	0.359	-	
Reproduction of color	Red	x_R	Θ = 0°	TBD	0.650	TBD	-	
		y_R			0.345		-	
	Green	x_G			0.330		-	
		y_G			0.619		-	
	Blue	x_B			0.151		-	
		y_B			0.334		-	
Gamut		-	-	68	72	-	%	
Response Time (Rising + Falling)		T_{RT}	Ta= 25° C Θ = 0°	-	30	35	Ms	Note 6
Cross Talk		CT	Θ = 0°	-	-	-	%	

Notes :

1. Viewing angle is the angle at which the contrast ratio is greater than 10. The viewing angles are determined for the horizontal or 3, 9 o'clock direction and the vertical or 6, 12 o'clock direction with respect to the optical axis which is normal to the LCD surface (see FIGURE 1).

2. Contrast measurements shall be made at viewing angle of Θ= 0 and at the center of the LCD surface. Luminance shall be measured with all pixels in the view field set first to white, then to the dark (black) state .
(see FIGURE 1) Luminance Contrast Ratio (CR) is defined mathematically.

$$CR = \frac{\text{Luminance when displaying a white raster}}{\text{Luminance when displaying a black raster}}$$

3. Center Luminance of white is defined as luminance values of 5 point average across the LCD surface. Luminance shall be measured with all pixels in the view field set first to white. This measurement shall be taken at the locations shown in FIGURE 2 for a total of the measurements per display.

4. The White luminance uniformity on LCD surface is then expressed as : ΔY =Minimum Luminance of 5(or 13) points / Maximum Luminance of 5(or 13) points.
(see FIGURE 2 and FIGURE 3).

5. The color chromaticity coordinates specified in Table 5 shall be calculated from the spectral data measured with all pixels first in red, green, blue and white. Measurements shall be made at the center of the panel.

6. The electro-optical response time measurements shall be made as FIGURE 4 by switching the "data" input signal ON and OFF. The times needed for the luminance to change from 10% to 90% is Tr, and 90% to 10% is Td.

7. Cross-Talk of one area of the LCD surface by another shall be measured by comparing the luminance (YA) of a 25mm diameter area, with all display pixels set to a gray level, to the luminance (YB) of that same area when any adjacent area is driven dark.
(See FIGURE 5).

4.3 Optical measurements

Figure 1. Measurement Set Up

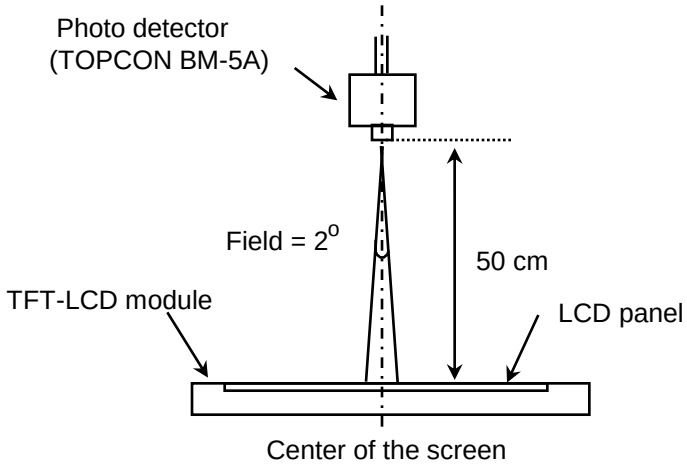

Optical characteristics measurement setup

Figure 2. White Luminance and Uniformity Measurement Locations (5 points)

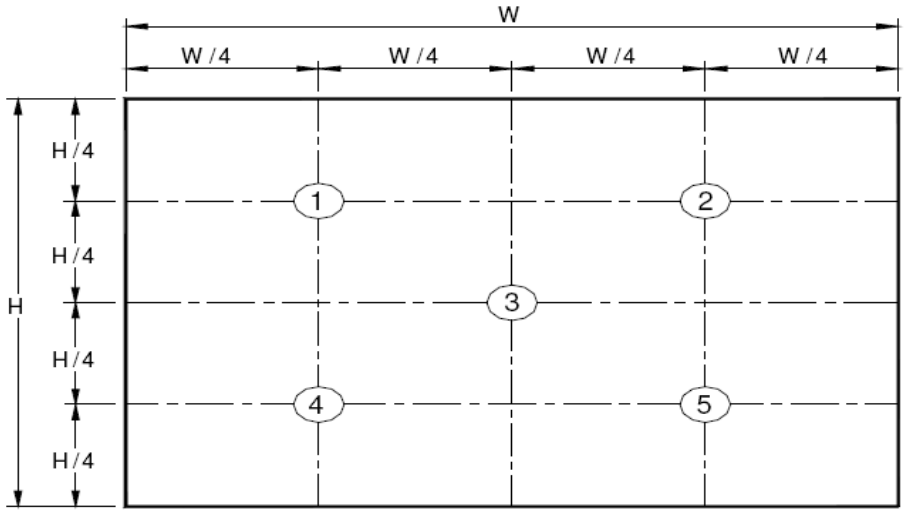

Center Luminance of white is defined as luminance values of center 5 points across the LCD surface. Luminance shall be measured with all pixels in the view field set first to white. This measurement shall be taken at the locations shown in FIGURE 2 for a total of the measurements per display.

Figure 3. Uniformity Measurement Locations (13 points)

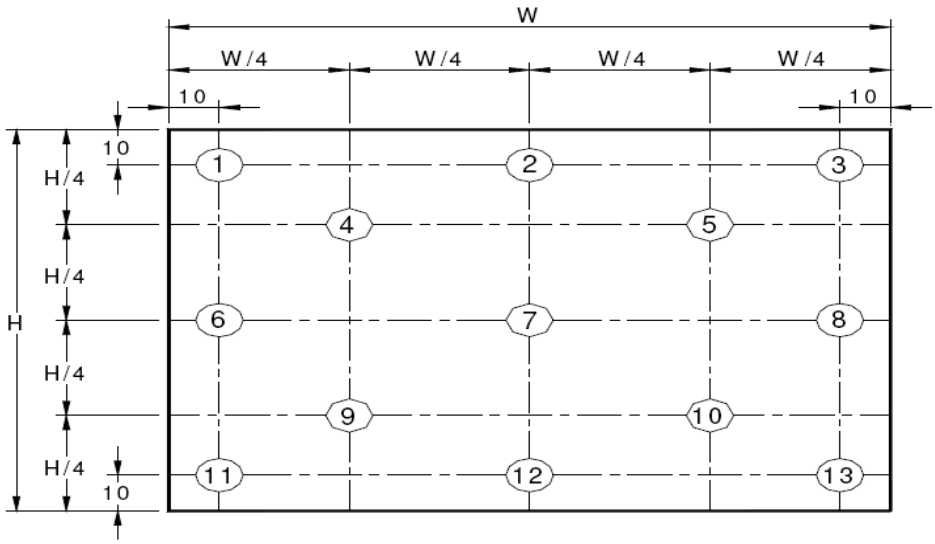

The White luminance uniformity on LCD surface is then expressed as : ΔY5 = Minimum Luminance of five points / Maximum Luminance of five points (see FIGURE 2) , ΔY13 = Minimum Luminance of 13 points /Maximum Luminance of 13 points (see FIGURE 3).

Figure 4. Response Time Testing

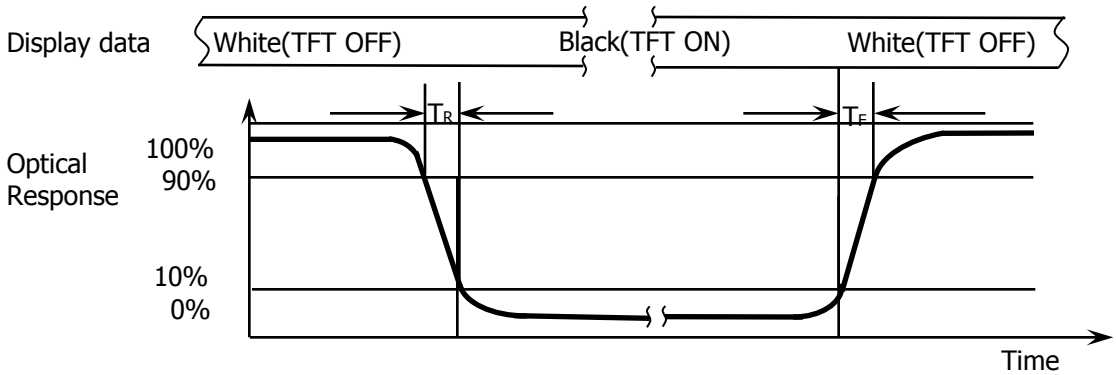

The electro-optical response time measurements shall be made as shown in FIGURE 4 by switching the “data” input signal ON and OFF. The times needed for the luminance to change from 10% to 90% is Td and 90% to 10% is Tr.

Figure 5. Cross Modulation Test Description

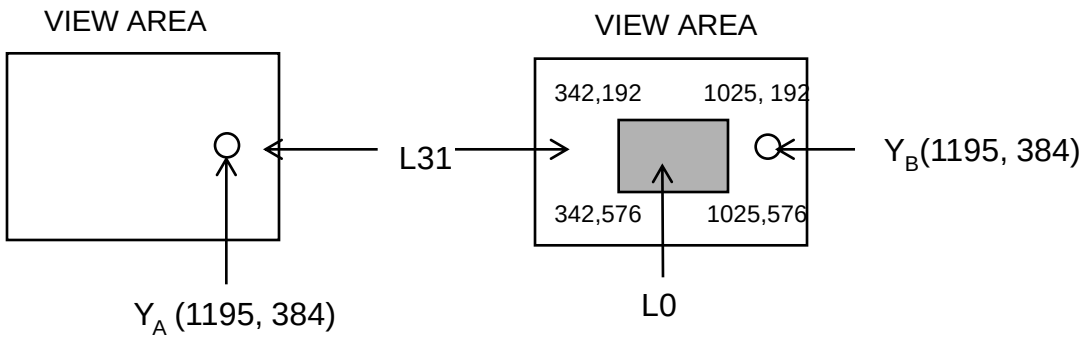

$$\text{Cross-Talk (\%)} = \left| \frac{Y_B - Y_A}{Y_A} \right| \times 100$$

Where:

Y_A = Initial luminance of measured area (cd/m^2)

Y_B = Subsequent luminance of measured area (cd/m^2)

The location measured will be exactly the same in both patterns

Cross-Talk of one area of the LCD surface by another shall be measured by comparing the luminance (YA) of a 25mm diameter area, with all display pixels set to a gray level, to the luminance (YB) of that same area when any adjacent area is driven dark (Refer to FIGURE 5).

5.0 INTERFACE CONNECTION.

5.1 Electrical Interface Connection

The electronics interface connector is STM MSAK24025P30 or Compatible.
The connector interface pin assignments are listed in Table 6.

<Table 6. Pin Assignments for the Interface Connector>

Terminal	Symbol	Functions
Pin No.	Symbol	Description
1	NC	No connection
2	H-GND	Ground
3	LAN1_N	Complement Signal Link _Lane1
4	LAN1_P	True Signal Link _Lane1
5	H-GND	Ground
6	LAN0_N	Complement Signal Link _Lane0
7	LAN0_P	True Signal Link _Lane0
8	H-GND	High Speed Ground
9	AUXP	True Signal Link _Auxiliry Channel
10	AUXN	Complement Signal Link _Auxiliry Channel
11	H-GND	Ground
12	LCD_VCC	Power Supply, 3.3V (typ.)
13	LCD_VCC	Power Supply, 3.3V (typ.)
14	BIST	Panel self test enable
15	H-GND	Ground
16	H-GND	Ground
17	HPD	HPD(Hot Plug Detect) Signal Pin
18	BL_GND	High Speed Ground
19	BL_GND	High Speed Ground
20	BL_GND	High Speed Ground
21	BL_GND	High Speed Ground
22	BL_EN	Backlight on/off Control pin
23	BL_PWM	Back light PWM Dimming
24	Hsnyc	Line synchronization
25	NC	No connection
26	BL_PWR	Backlight power
27	BL_PWR	Backlight power
28	BL_PWR	Backlight power
29	BL_PWR	Backlight power
30	NC	No connection

5-2. eDP Interface

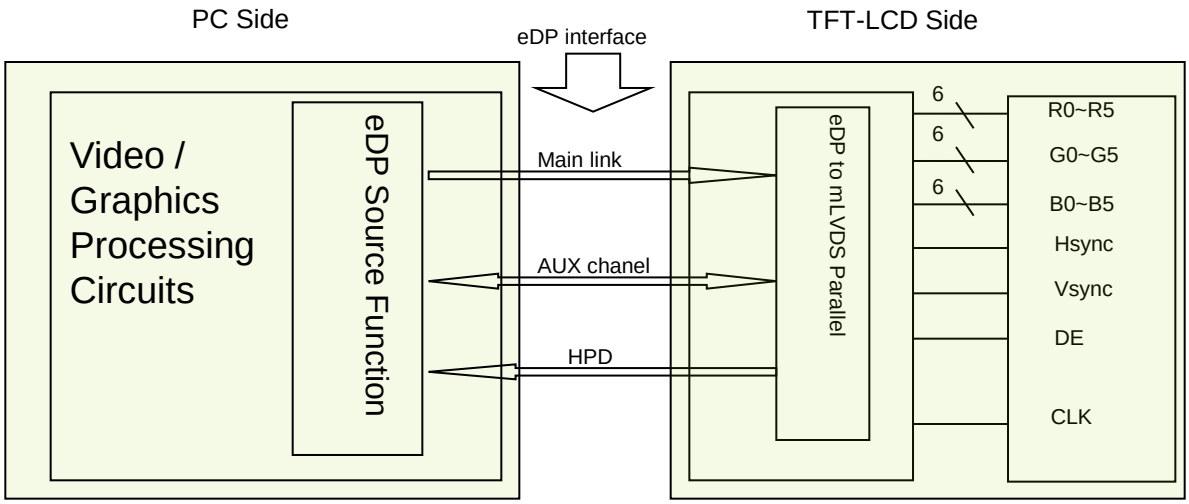

Note. Transmitter : HX8879-BG2 or equivalent.
Transmitter is not contained in Module.

5.3.eDP Input signal

Lane 0	
R0-5:0	G0-5:4
G0-3.0	B0-5:2
B0-1:0	R1-5:0
G1-5:0	B1-5:4
B1-3:0	R2-5:2
R2-1:0	G2-5:0
B2-5:0	R3-5:4
R3-3:0	G3-5:2
G3-1:0	B3-5:0

5.4 Back-light & LCM Interface Connection

<Table 7. Pin Assignments for the BLU & LCM Connector>

Pin No.	Symbol	Description	Pin No.	Symbol	Description
1	LED	LED cathode connection	6	NC	No Connection
2	LED	LED cathode connection	7	Vout	LED anode connection
3	LED	LED cathode connection	8	Vout	LED anode connection
4	LED	LED cathode connection	9	Vout	LED anode connection
5	NC	No Connection			

6.0 SIGNAL TIMING SPECIFICATION

6.1 The NV133FHM-N52 is operated by the DE only.

Item		Symbols	Min	Typ	Max	Unit
Clock	Frequency	1/Tc	100	148.5	160	MHz
Frame Period		Tv	1112	1125	1238	lines
			-	60	-	Hz
			25	16.67	15.15	ms
Vertical Display Period		Tvd	-	1080	-	lines
One line Scanning Period		Th	2080	2200	2400	clocks
Horizontal Display Period		Thd	-	1920	-	clocks

6.2 eDP Rx Interface Timing Parameter

The specification of the eDP Rx interface timing parameter is shown in Table 8.

<Table 9. eDP Rx Interface Timing Specification>

Item	Symbol	Min	Typ	Max	Unit	Remark
Spread spectrum clock	ssc		0.5		%	
Differential peak-to-peak input voltage at package pins	$V_{RX-DIFFp-p}$	500	0	1000	mV	
Rx input DC common mode voltage	$V_{RX\_DC\_CM}$	-	GND	-	V	
Differential termination resistance	$R_{RX-DIFF}$	80	-	100	Ω	
Single-ended termination resistance	R_{RX-SE}	40	-	60	Ω	
Rx short circuit current limit	I_{RX_SHORT}	-	-	20	mA	
Intra-pair skew at Rx package pins (HBR) RX intra-pair skew tolerance at HBR	$L_{RX\_SKEW\_INTRA\_PAIR}$	-	-	150	ps	

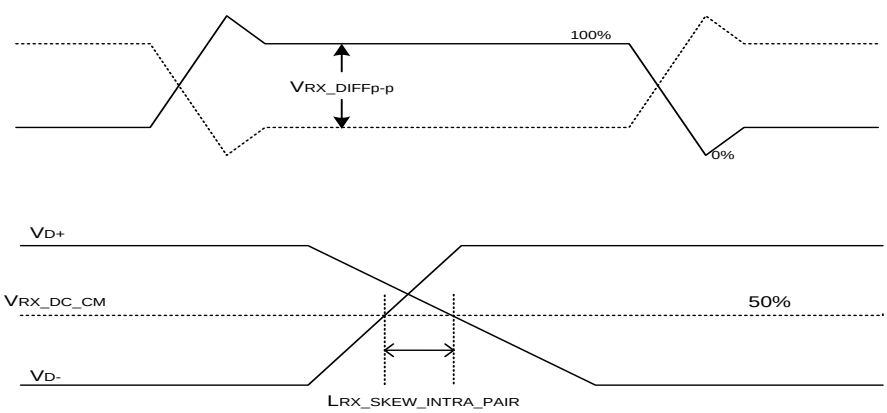

7.0 INPUT SIGNALS, BASIC DISPLAY COLORS & GRAY SCALE OF COLORS

	Colors & Gray scale	Data signal		
		R0 R1 R2 R3 R4 R5	G0 G1 G2 G3 G4 G5	B0 B1 B2 B3 B4 B5
Basic colors	Black	0 0 0 0 0 0	0 0 0 0 0 0	0 0 0 0 0 0
	Blue	0 0 0 0 0 0	0 0 0 0 0 0	1 1 1 1 1 1
	Green	0 0 0 0 0 0	1 1 1 1 1 1	0 0 0 0 0 0
	Light Blue	0 0 0 0 0 0	1 1 1 1 1 1	1 1 1 1 1 1
	Red	1 1 1 1 1 1	0 0 0 0 0 0	0 0 0 0 0 0
	Purple	1 1 1 1 1 1	0 0 0 0 0 0	1 1 1 1 1 1
	Yellow	1 1 1 1 1 1	1 1 1 1 1 1	0 0 0 0 0 0
	White	1 1 1 1 1 1	1 1 1 1 1 1	1 1 1 1 1 1
Gray scale of Red	Black	0 0 0 0 0 0	0 0 0 0 0 0	0 0 0 0 0 0
	△	1 0 0 0 0 0	0 0 0 0 0 0	0 0 0 0 0 0
	Darker	0 1 0 0 0 0	0 0 0 0 0 0	0 0 0 0 0 0
	△ ▽	↑ ↓	↑ ↓	↑ ↓
	Brighter	1 0 1 1 1 1	0 0 0 0 0 0	0 0 0 0 0 0
	▽	0 1 1 1 1 1	0 0 0 0 0 0	0 0 0 0 0 0
	Red	1 1 1 1 1 1	0 0 0 0 0 0	0 0 0 0 0 0
Gray scale of Green	Black	0 0 0 0 0 0	0 0 0 0 0 0	0 0 0 0 0 0
	△	0 0 0 0 0 0	1 0 0 0 0 0	0 0 0 0 0 0
	Darker	0 0 0 0 0 0	0 1 0 0 0 0	0 0 0 0 0 0
	△ ▽	↑ ↓	↑ ↓	↑ ↓
	Brighter	0 0 0 0 0 0	1 0 1 1 1 1	0 0 0 0 0 0
	▽	0 0 0 0 0 0	0 1 1 1 1 1	0 0 0 0 0 0
	Green	0 0 0 0 0 0	1 1 1 1 1 1	0 0 0 0 0 0
Gray scale of Blue	Black	0 0 0 0 0 0	0 0 0 0 0 0	0 0 0 0 0 0
	△	0 0 0 0 0 0	0 0 0 0 0 0	1 0 0 0 0 0
	Darker	0 0 0 0 0 0	0 0 0 0 0 0	0 1 0 0 0 0
	△ ▽	↑ ↓	↓ ↓	↑ ↓
	Brighter	0 0 0 0 0 0	0 0 0 0 0 0	1 0 1 1 1 1
	▽	0 0 0 0 0 0	0 0 0 0 0 0	0 1 1 1 1 1
	Blue	0 0 0 0 0 0	0 0 0 0 0 0	1 1 1 1 1 1
Gray scale of White & Black	Black	0 0 0 0 0 0	0 0 0 0 0 0	0 0 0 0 0 0
	△	1 0 0 0 0 0	1 0 0 0 0 0	1 0 0 0 0 0
	Darker	0 1 0 0 0 0	0 1 0 0 0 0	0 1 0 0 0 0
	△ ▽	↑ ↓	↑ ↓	↑ ↓
	Brighter	1 0 1 1 1 1	1 0 1 1 1 1	1 0 1 1 1 1
	▽	0 1 1 1 1 1	0 1 1 1 1 1	0 1 1 1 1 1
	White	1 1 1 1 1 1	1 1 1 1 1 1	1 1 1 1 1 1

8.0 POWER SEQUENCE

To prevent a latch-up or DC operation of the LCD module, the power on/off seq uence shall be as shown in below

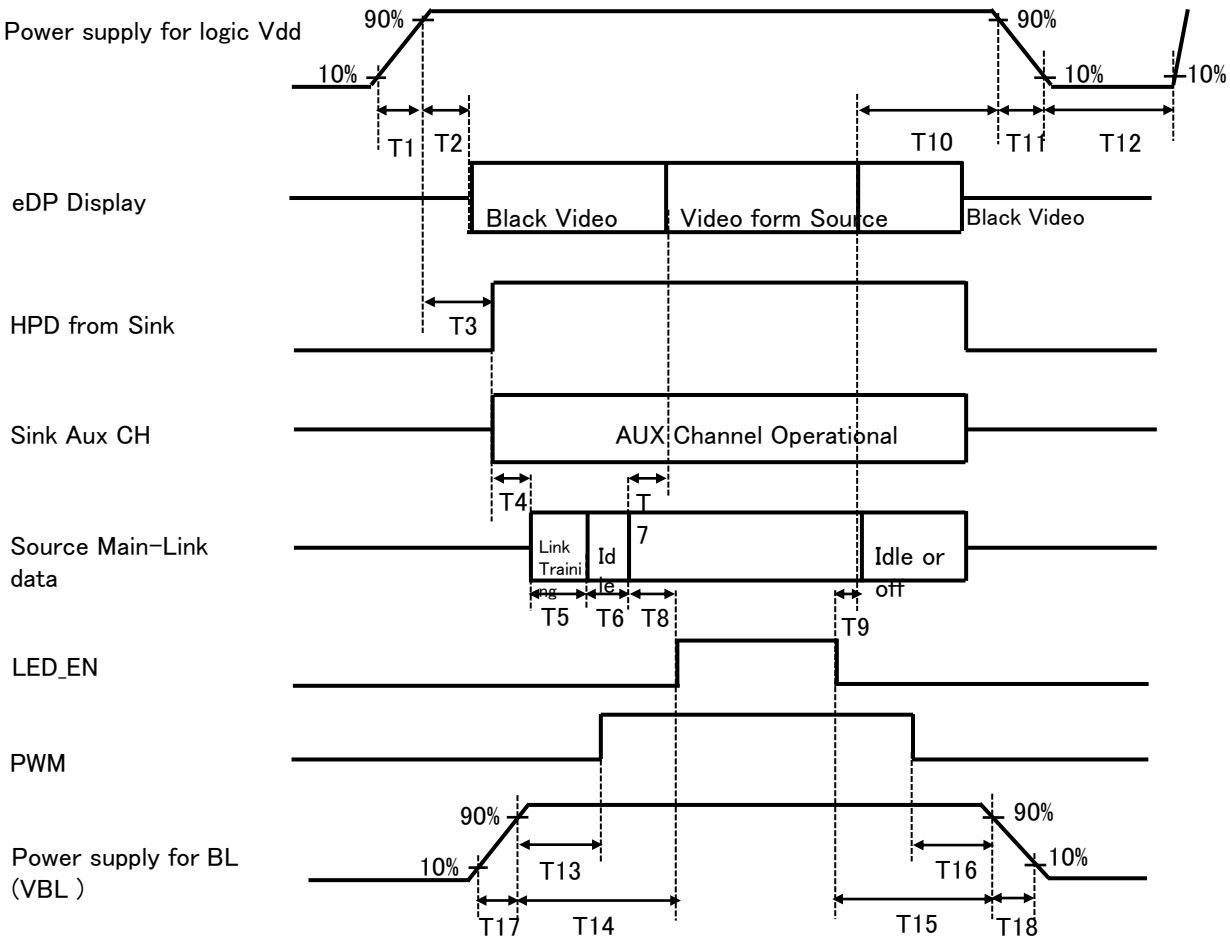

- 0.5ms ≤ T1 ≤ 10 ms
- 0ms ≤ T2 ≤ 200 ms
- 0ms ≤ T3 ≤ 200 ms
- 10ms ≤ T13
- 20ms ≤ T14
- 0.5ms ≤ T17 ≤ 20ms
- 0ms ≤ T7 ≤ 50ms
- 0ms ≤ T10 ≤ 500 ms
- 3ms ≤ T11 ≤ 10 ms
- 500ms ≤ T12
- 20ms ≤ T15
- 10ms ≤ T16
- 0.5ms ≤ T18 ≤ 20ms

Notes:

1. When the power supply VDD is 0V, keep the level of input signals on the low or k eep high impedance.
2. Do not keep the interface signal high impedance when power is on. Back Light must be turn on after power for logic and interface signal are valid.

9.0 RELIABILITY TEST

The Reliability test items and its conditions are shown in below.

<Table 10. Reliability test>

No	Test Items	Conditions
1	High temperature storage test	Ta = 60 ℃, 240 hrs
2	Low temperature storage test	Ta = -20 ℃, 240 hrs
3	High temperature & high humidity operation test	Ta = 40 ℃, 90%RH, 240 hrs
4	High temperature operation test	Ta = 50 ℃, 240 hrs
5	Low temperature operation test	Ta = 0 ℃, 240 hrs
6	Thermal shock	Ta = -40 ℃ ↔ 80 ℃ (0.5 hr), 100 cycle
7	Drop (non-operating)	60cm/1 corner/3 edges/6 faces
8	Shock test (non-operating)	220G, Half Sine Wave 2msec ±X,±Y,±Z Once for each direction
9	Electro-static discharge test (non-operating)	Air : 150 pF, 330Ω, 15 KV Contact : 150 pF, 330Ω, 8 KV

11.0 HANDLING & CAUTIONS

(1) Cautions when taking out the module

- Pick the pouch only, when taking out module from a shipping package.

(2) Cautions for handling the module

- As the electrostatic discharges may break the LCD module, handle the LCD module with care. Peel a protection sheet off from the LCD panel surface as slowly as possible.
- As the LCD panel and back - light element are made from fragile glass material, impulse and pressure to the LCD module should be avoided.
- As the surface of the polarizer is very soft and easily scratched, use a soft dry cloth without chemicals for cleaning.
- Do not pull the interface connector in or out while the LCD module is operating.
- Put the module display side down on a flat horizontal plane.
- Handle connectors and cables with care.

(3) Cautions for the operation

- When the module is operating, do not lose CLK, ENAB signals. If any one of these signals is lost, the LCD panel would be damaged.
- Obey the supply voltage sequence. If wrong sequence is applied, the module would be damaged.

(4) Cautions for the atmosphere

- Dew drop atmosphere should be avoided.
- Do not store and/or operate the LCD module in a high temperature and/or humidity atmosphere. Storage in an electro-conductive polymer packing pouch and under relatively low temperature atmosphere is recommended.

(5) Cautions for the module characteristics

- Do not apply fixed pattern data signal to the LCD module at product aging.
- Applying fixed pattern for a long time may cause image sticking.

(6) Other cautions

- Do not disassemble and/or re-assemble LCD module.
- Do not re-adjust variable resistor or switch etc.
- When returning the module for repair or etc., Please pack the module not to be broken. We recommend to use the original shipping packages.

12.0 LABEL

(1) LCM label

LCM ID 编码规则:

序列号	1	2	3	4	5	6	7	8	9	10	11	12	13	14	15	16	17
代码	S	L	S	T	1	2	3	5	9	4	2	0	0	0	1	D	B
描述	GBN		等级	line	年		月	FG-Code后4位				Serial Number					

客户Serial Number码规则：

	YMD	####
Part Number	MFG Date	S/N
13 digit: num-alphabet	3 digit: Num-alphabet	4 digit: Num-alphabet
Follow Timi PN Rule MD10000004337	Skip "I,O,Q"	SN:4bit, use 0~9 and A~Z numeral-alphabet, skip letter "I,O,Q,U" ; SN must NOT be duplicated.
	Year=last digit of year	
	Month=1-9 for Jan-Sept, A=Oct, B=Nov, C=Dec	
	Day=1-9 for 1st thru 9th, A=10, B=11, etc. skip "I,O,Q,U"	

(2) High voltage caution label

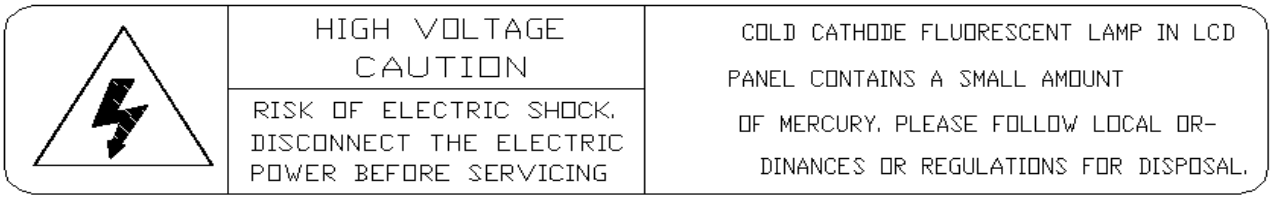

(3) Box label

蓝色字体为后打印标识, 说明如下:

1. **FG-CODE**
2. **Box 产品数量**
3. **Box ID, 编码规则如下**
4. **Box Packing 日期**
5. **产品物料号(客户端)**
6. **FG-CODE 后四位**

Box ID 编码规则

序列号	1	2	3	4	5	6	7	8	9	10	11	12	13
代码	S	L	S	T	1	4	3	D	0	0	1	H	D
描述	GBN代码		等级	TM1	年份		月	Rev	Serial Number				

13.0 PACKING INFORMATION

13.1 Packing order

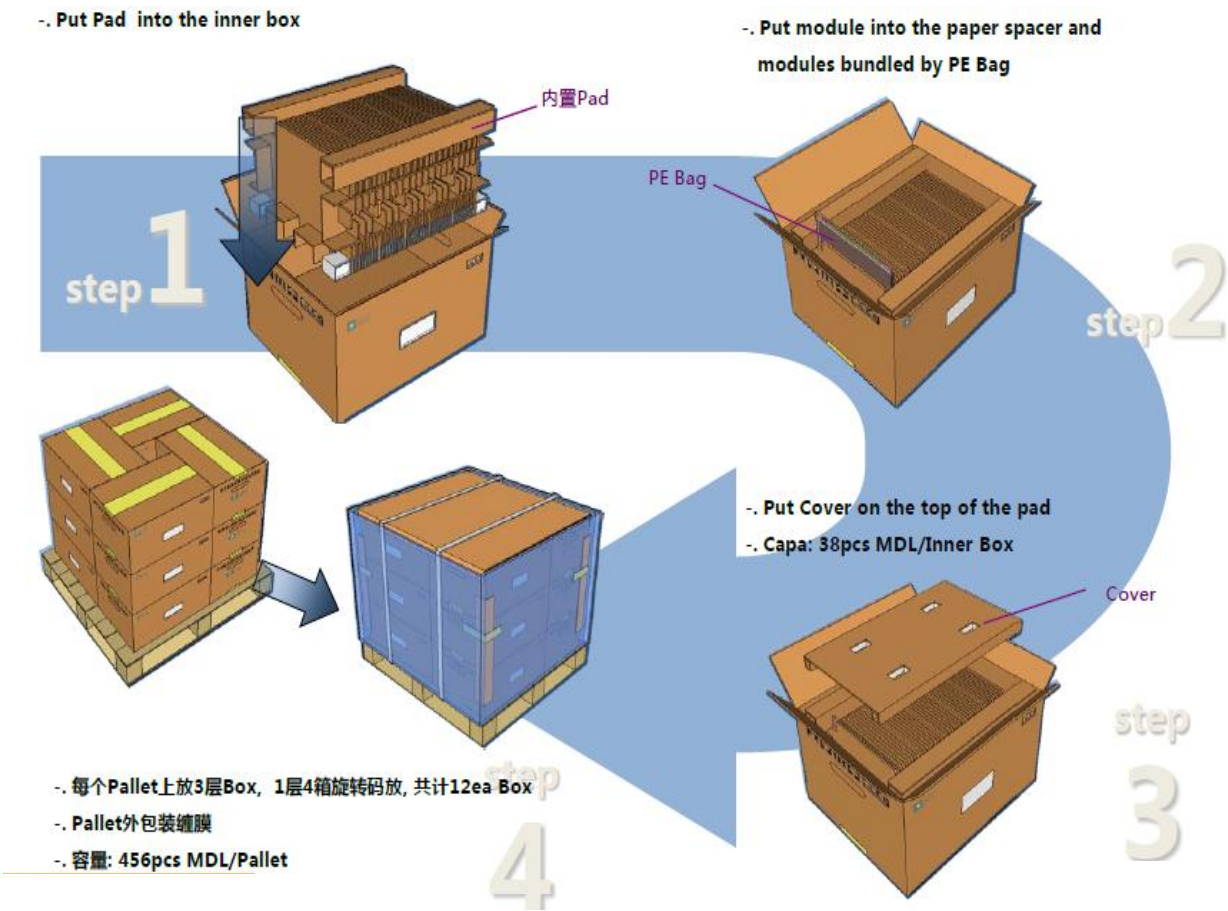

13.2 Notes

- Box Dimension: TBD
- Package Quantity in one Box: 25pcs
- Total Weight: TBD

14. MECHANICAL OUTLINE DIMENSION

14.1 Outline Dimension

Figure 6. Outline Dimensions (Front view)

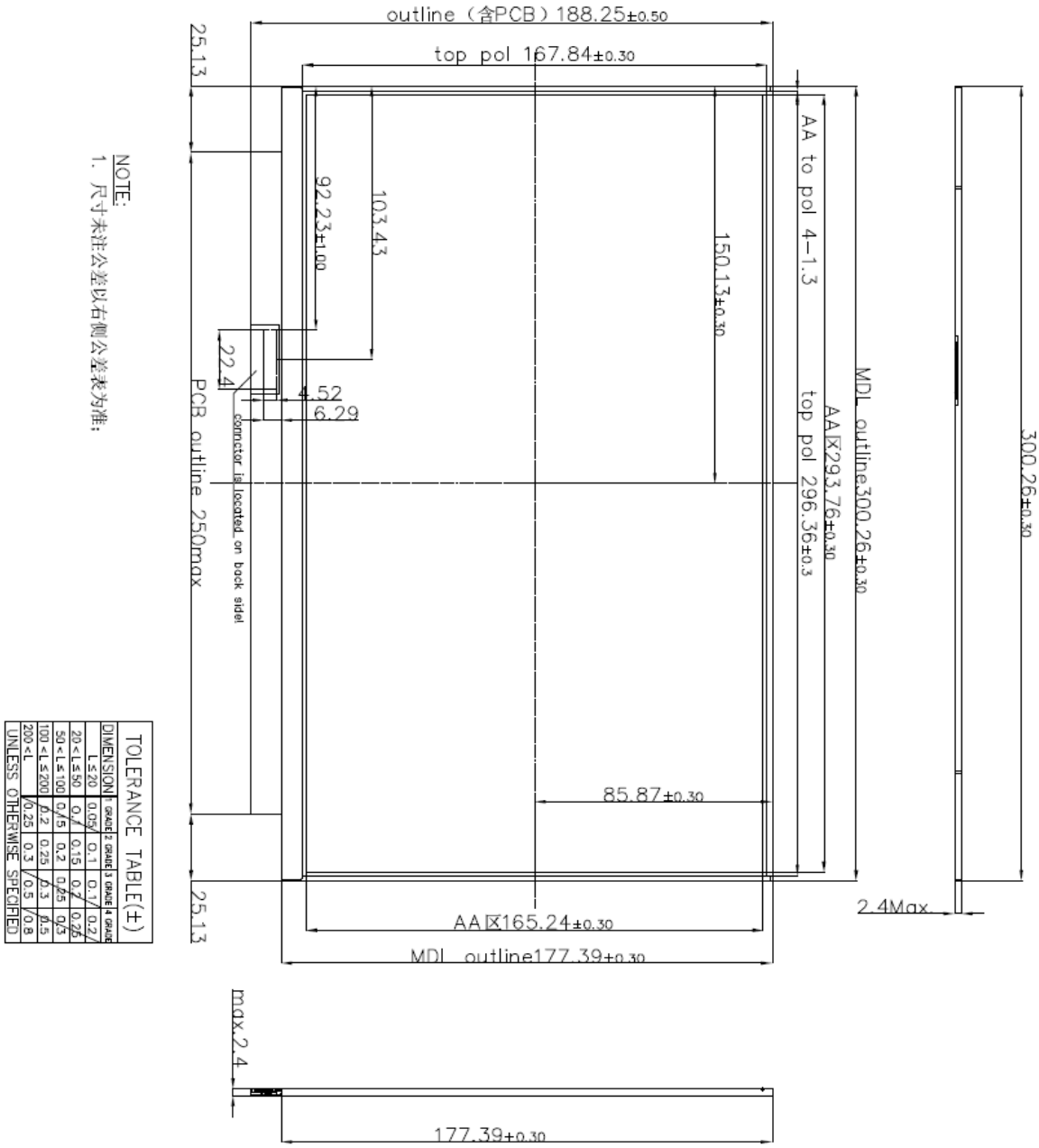

14.2 Total Solution Outline Dimension

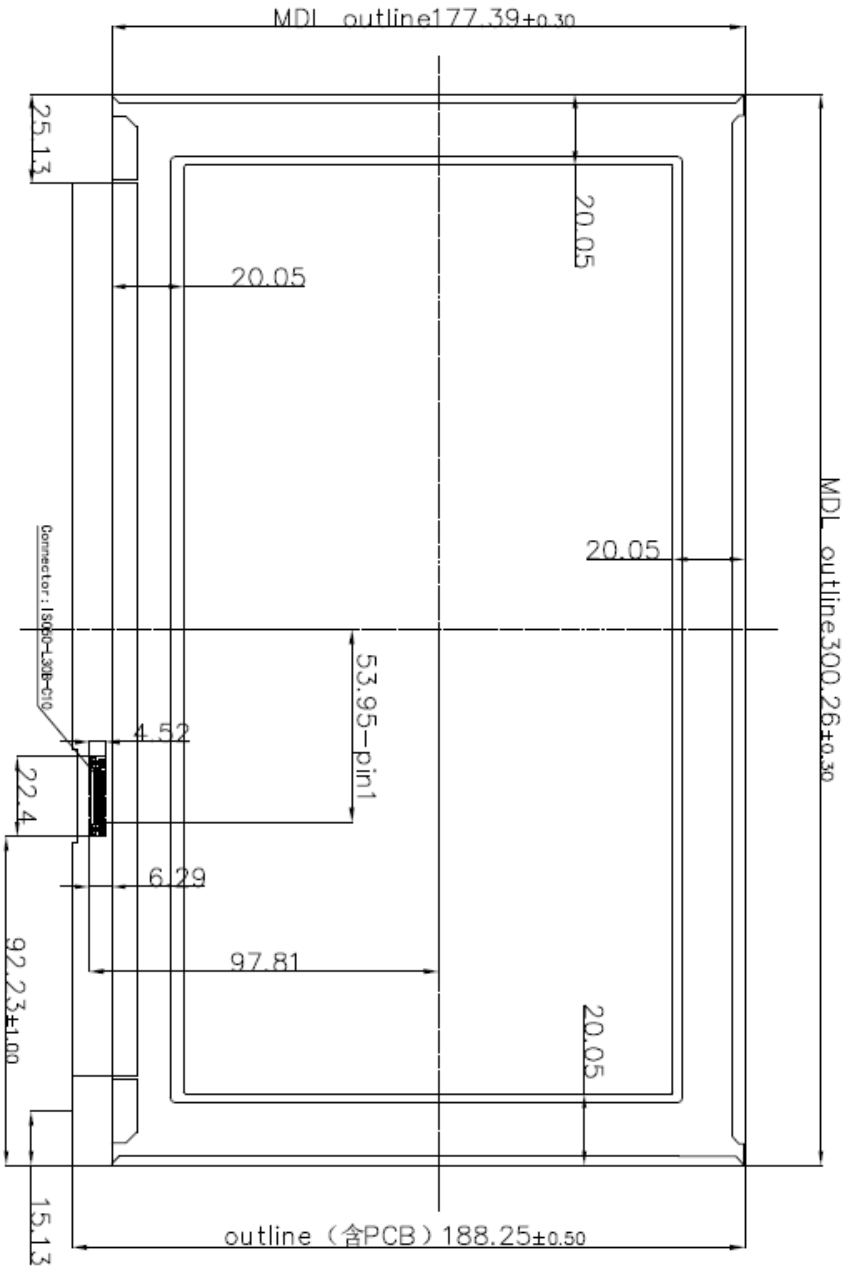

NOTE:
1. 尺寸未注公差以右侧公差表为准;

TOLERANCE TABLE(±)

DIMENSION	GRADE 1	GRADE 2	GRADE 3	GRADE 4
L≤20	0.05/	0.1	0.1/	0.2/
20 < L ≤ 50	0.1	0.15	0.2	0.26
50 < L ≤ 100	0.15	0.2	0.25	0.3
100 < L ≤ 200	0.2	0.25	0.3	0.5
200 < L	0.25	0.3	0.5	0.8

UNLESS OTHERWISE SPECIFIED

15.0 EDID Table

Address (HEX)	Function	Hex	Dec	Input values.	Notes
00	Header	00	0	0	EDID Header
01		FF	255	255	
02		FF	255	255	
03		FF	255	255	
04		FF	255	255	
05		FF	255	255	
06		FF	255	255	
07		00	0	0	
08	ID Manufacturer Name	09	9	BOE	ID = BOE
09		E5	229		
0A	ID Product Code	B7	183	1719	ID = 1719
0B		06	6		
0C	32-bit serial No.	00	0		
0D		00	0		
0E		00	0		
0F		00	0		
10	Week of manufacture	01	1	1	
11	Year of Manufacture	1A	26	2016	Manufactured in 2016
12	EDID Structure Ver.	01	1	1	EDID Ver 1.0
13	EDID revision #	04	4	4	EDID Rev. 0.4
14	Video input definition	95	149	-	digital signal/DP input
15	Max H image size	1D	29	29	29 cm (Approx)
16	Max V image size	11	17	17	17 cm (Approx)
17	Display Gamma	78	120	2.2	Gamma curve = 2.2
18	Feature support	0A	10		RGB display, Preferred Timming mode
19	Red/Green low bits	11	17	-	Red / Green Low Bits
1A	Blue/White low bits	60	96	-	Blue / White Low Bits
1B	Red x high bits	AB	171	0.668	Red (x) = 10101011 (0.668)
1C	Red y high bits	53	83	0.326	Red (y) = 01010011 (0.326)
1D	Green x high bits	47	71	0.278	Green (x) = 01000111 (0.278)
1E	Green y high bits	96	150	0.587	Green (y) = 10010110 (0.587)
1F	Blue x high bits	23	35	0.138	Blue (x) = 00100011 (0.138)
20	BLue y high bits	18	24	0.096	Blue (y) = 00011000 (0.096)
21	White x high bits	50	80	0.313	White (x) = 01010000 (0.313)
22	White y high bits	54	84	0.329	White (y) = 01010100 (0.329)
23	Established timing 1	00	0	-	
24	Established timing 2	00	0	-	

25	Established timing 3	00	0	-	
26	Standard timing #1	01	1		Not Used
27		01	1		
28	Standard timing #2	01	1		Not Used
29		01	1		
2A	Standard timing #3	01	1		Not Used
2B		01	1		
2C	Standard timing #4	01	1		Not Used
2D		01	1		
2E	Standard timing #5	01	1		Not Used
2F		01	1		
30	Standard timing #6	01	1		Not Used
31		01	1		
32	Standard timing #7	01	1		Not Used
33		01	1		
34	Standard timing #8	01	1		Not Used
35		01	1		
36	Detailed timing/monitor descriptor #1	BC	188	147.8	147.8MHz Main clock
37		39	57		
38		80	128	1920	Hor Active = 1920
39		18	24	280	Hor Blanking = 280
3A		71	113	-	4 bits of Hor. Active + 4 bits of Hor. Blanking
3B		38	56	1080	Ver Active = 1080
3C		28	40	40	Ver Blanking = 40
3D		40	64	-	4 bits of Ver. Active + 4 bits of Ver. Blanking
3E		30	48	48	Hor Sync Offset = 48
3F		20	32	32	H Sync Pulse Width = 32
40		36	54	3	V sync Offset = 3 line
41		00	0	6	V Sync Pulse width : 6 line
42		26	38	294	Horizontal Image Size = 294 mm (Low 8 bits)
43		A5	165	165	Vertical Image Size = 165 mm (Low 8 bits)
44		10	16	-	4 bits of Hor Image Size + 4 bits of Ver Image Size
45		00	0	0	Hor Border (pixels)
46		00	0	0	Vertical Border (Lines)
47		1A	26		Refer to right table

48	Detailed timing/monitor descriptor #2	36	54	118.3	118.3MHz Main clock
49		2E	46		
4A		80	128	1920	Hor Active = 1920
4B		18	24	280	Hor Blanking = 280
4C		71	113	-	4 bits of Hor. Active + 4 bits of Hor. Blanking
4D		38	56	1080	Ver Active = 1080
4E		28	40	40	Ver Blanking = 40
4F		40	64	-	4 bits of Ver. Active + 4 bits of Ver. Blanking
50		30	48	48	Hor Sync Offset = 48
51		20	32	32	H Sync Pulse Width = 32
52		36	54	3	V sync Offset = 3 line
53		00	0	6	V Sync Pulse width : 6 line
54		26	38	294	Horizontal Image Size = 294 mm (Low 8 bits)
55		A5	165	165	Vertical Image Size = 165 mm (Low 8 bits)
56		10	16	-	4 bits of Hor Image Size + 4 bits of Ver Image Size
57		00	0	0	Hor Border (pixels)
58		00	0	0	Vertical Border (Lines)
59		1A	26		
5A	Detailed timing/monitor descriptor #3	00	0		ASCII Data Sting Tag
5B		00	0		
5C		00	0		
5D		FE	254		
5E		00	0		
5F		42	66	B	Manufacture name : BOE CQ
60		4F	79	O	
61		45	69	E	
62		20	32		
63		43	67	C	
64		51	81	Q	
65		0A	10		
66		20	32		
67		20	32		
68		20	32		
69		20	32		
6A		20	32		
6B		20	32		

6C	Detailed timing/monitor descriptor #4	00	0		Product Name Tag (ASCII)
6D		00	0		
6E		00	0		
6F		FE	254		
70		00	0		
71		4E	78	N	Model name : NV133FHM-N62
72		56	86	V	
73		31	49	1	
74		33	51	3	
75		33	51	3	
76		46	70	F	
77		48	72	H	
78		4D	77	M	
79		2D	45	-	
7A		4E	78	N	
7B		36	54	6	
7C		32	50	2	
7D		0A	10		
7E	Extension flag	00	0		
7F	Checksum	C7	199	-	