NV156FHM-N41

Preliminary Product Specification

Rev. P1

HEFEI XINSHENG OPTOELECTRONICS TECHNOLOGY CO.,LTD

京东方 BOE	PRODUCT GROUP	REV	ISSUE DATE
	TFT- LCD PRODUCT	P1	2014.10.17
SPEC. NUMBER	SPEC. TITLE NV156FHM-N41 Preliminary Product Specification		PAGE 2 OF 33

REVISION HISTORY

REV.	ECN No.	DESCRIPTION OF CHANGES	DATE	PREPARED
P0	-	Initial Release	2014.09.11	杨通
P1	-	Update EDID & Label information	2014.10.17	杨通

Contents

1.0 GENERAL DESCRIPTION

1.1 Introduction

NV156FHM-N41 is a color active matrix TFT LCD module using amorphous silicon TFT's (Thin Film Transistors) as an active switching devices. This module has a 15.6 inch diagonally measured active area with FHD resolutions (1920 horizontal by 1080vertical pixel array). Each pixel is divided into RED, GREEN, BLUE dots which are arranged in vertical Stripe and this module can display 262,144 colors. The TFT-LCD panel used for this module is a low reflection and higher color type. Therefore, this module is suitable for Notebook PC. The LED Driver for back-light driving is built in this model.
All input signals are eDP1.2 interface compatible.

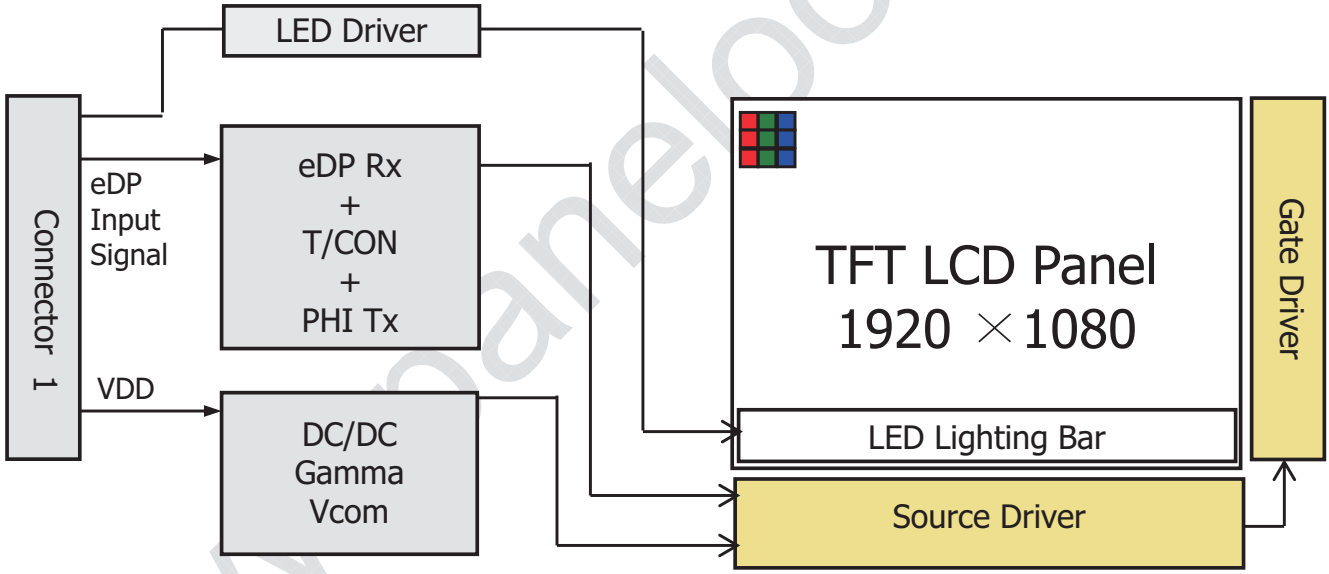

1.2 Features

- 2 lane eDP Interface with 2.7Gbps Link Rates
- Thin and light weight
- 6-bit color depth, display 262K colors
- Single LED Lighting Bar. (Down side/Horizontal Direction)
- Green Product (RoHS & Halogen free product)
- On board LED Driving circuit
- Low driving voltage and low power consumption
- On board EDID chip

1.3 Application

- Notebook PC (Wide type)

1.4 General Specification

The followings are general specifications at the model NV156FHM-N41. (listed in Table 1.)

<Table 1. General Specifications>

Parameter	Specification	Unit	Remarks
Active area	344.16 (H) ×193.59 (V)	mm	
Number of pixels	1920 (H) ×1080 (V)	pixels	
Pixel pitch	0.17925 (H) X 0.17925 (V)	mm	
Pixel arrangement	RGB Vertical stripe		
Display colors	262K	colors	
Display mode	Normally Black		
Dimensional outline	359.5(H)*223.8(V) (W/PCB)*3.2(Max)	mm	
Weight	380 (max)	g	
Surface treatment	AG		
Back-light	Lower Down side, 1-LED Lighting Bar type		Note 1
Power consumption	P_D : 1.6 (max)	W	
	P_{BL} :2.98(max)	W	
	P_{total} :4.58(max)	W	

Notes : 1. LED Lighting Bar (40*LED Array)

2.0 ABSOLUTE MAXIMUM RATINGS

The followings are maximum values which, if exceed, may cause faulty operation or damage to the unit. The operational and non-operational maximum voltage and current values are listed in Table 2.

< Table 2. Absolute Maximum Ratings> Ta=25+/-2°C

Parameter	Symbol	Min.	Max.	Unit	Remarks
Power Supply Voltage	V_{DD}	-0.3	4.0	V	Note 1
Logic Supply Voltage	V_{IN}	V_{ss}-0.3	V_{DD}+0.3	V	
Operating Temperature	T_{OP}	0	+50	℃	Note 2
Storage Temperature	T_{ST}	-20	+60	℃	

Notes : 1. Permanent damage to the device may occur if maximum values are exceeded functional operation should be restricted to the condition described under normal operating conditions.

2. Temperature and relative humidity range are shown in the figure below.
95 % RH Max. (40 ^{O}C ≥ Ta)
Maximum wet - bulb temperature at 39 ^{O}C or less. (Ta > 40 ^{O}C) No condensation.

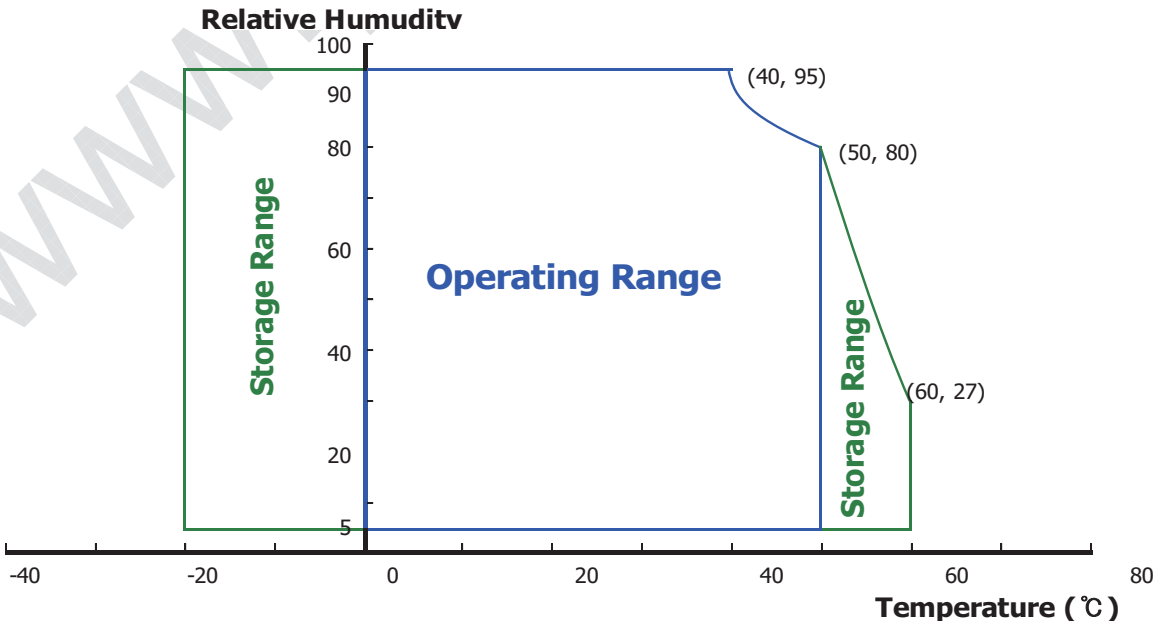

3.0 ELECTRICAL SPECIFICATIONS

3.1 Electrical Specifications

< Table 3. Electrical specifications > Ta=25+/-2°C

Parameter		Min.	Typ.	Max.	Unit	Remarks
Power Supply Voltage	V_{DD}	3.0	3.3	3.6	V	Note 1
Permissible Input Ripple Voltage	V_{RF}	-	-	100	mV	At V_{DD} = 3.3V
Power Supply Current	I_{DD}	-	TBD	-	mA	Note 1
Differential Input Voltage	V_{ID}	200	-	600	mV	
Power Consumption	P_D	-	1.0	1.6	W	Note 1
	P_{BL}	-	-	2.98	W	Note 2
	P_{total}	-	-	4.58	W	

Notes : 1. The supply voltage is measured and specified at the interface connector of LCM.
The current draw and power consumption specified is for 3.3V at 25℃.
a) Typ : Mosaic Pattern
b) Max : R/G/B Pattern

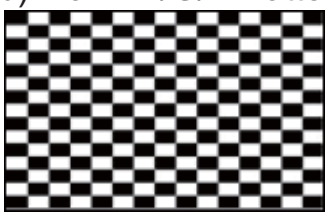

2. Calculated value for reference (V_{LED} × I_{LED})

3.2 Backlight Unit

< Table 4. LED Driving guideline specifications > Ta=25+/-2°C

Parameter			Min.	Typ.	Max.	Unit	Remarks
LED Forward Voltage		V_F	-	-	3.0	V	-
LED Forward Current		I_F	-	21.6	-	mA	-
LED Power Consumption		P_{LED}		-	2.98	W	Note 1
LED Life-Time		N/A	15,000	-	-	Hour	I_F = 20mA
Power supply voltage for LED Driver		V_{LED}	5	12	21	V	
EN Control Level	Backlight on		2.5		5.0	V	
	Backlight off		0		1.0	V	
PWM Control Level	PWM High Level		2.5		5.0	V	
	PWM Low Level		0		0.1	V	
PWM Control Frequency		F_{PWM}	100	-	10,000	Hz	
Duty Ratio		-	1	-	100	%	Note3

Notes : 1. Power supply voltage12V for LED Driver
Calculator Value for reference $I_F \times V_F \times 40$ / efficiency = P_{LED}
2. The LED Life-time define as the estimated time to 50% degradation of initial luminous.
3. 1% duty cycle is achievable with a dimming frequency less than 1KHz.

3.3 LED structure

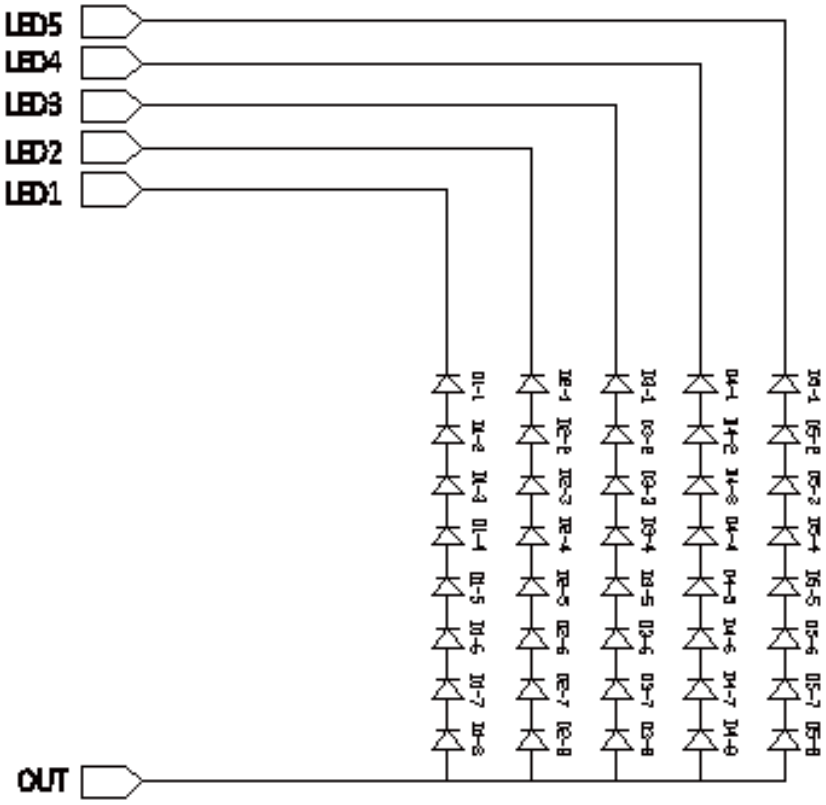

4.0 OPTICAL SPECIFICATION

4.1 Overview

The test of Optical specifications shall be measured in a dark room (ambient luminance ≤ 1 lux and temperature = 25±2℃) with the equipment of Luminance meter system (Goniometer system and PR730) and test unit shall be located at an approximate distance 50cm from the LCD surface at a viewing angle of θ and Φ equal to 0°. We refer to θØ=0 (=θ3) as the 3 o'clock direction (the "right"), θØ=90 (= θ12) as the 12 o'clock direction ("upward"), θØ=180 (= θ9) as the 9 o'clock direction ("left") and θØ=270(= θ6) as the 6 o'clock direction ("bottom"). While scanning θand/or Ø, the center of the measuring spot on the Display surface shall stay fixed. The backlight should be operating for 30 minutes prior to measurement. VDD shall be 3.3+/- 0.3V at 25°C. Optimum viewing angle direction is 6 'clock.

4.2 Optical Specifications

<Table 5. Optical Specifications>

Parameter		Symbol	Condition	Min.	Typ.	Max.	Unit	Remark
Viewing Angle range	Horizontal	Θ_3	CR > 10	-	85	-	Deg.	Note 1
		Θ_9		-	85	-	Deg.	
	Vertical	Θ_{12}		-	85	-	Deg.	
		Θ_6		-	85	-	Deg.	
Luminance Contrast ratio		CR	Θ = 0°	-	800			Note 2
Luminance of White	5 Points	Y_w	Θ = 0° I_{LED} = 21.6mA	-	220	-	cd/m²	Note 3
White Luminance uniformity	5 Points	ΔY5		80	-	-		Note 4
	13 Points	ΔY13		65	-	-		
White Chromaticity		x_w	Θ = 0°	0.283	0.313	0.343		Note 5
		y_w		0.299	0.329	0.359		
Reproduction of color	Red	x_R	Θ = 0°	-0.03	0.590	+0.03		
		y_R			0.350			
	Green	x_G			0.330			
		y_G			0.555			
	Blue	x_B			0.153			
		y_B			0.119			
Gamut					45		%	
Response Time (Rising + Falling)		T_{RT}	Ta= 25° C Θ = 0°	-	30	35	ms	Note 6
Cross Talk		CT	Θ = 0°	-	-	2.0	%	Note 7

Notes :

1. Viewing angle is the angle at which the contrast ratio is greater than 10. The viewing angles are determined for the horizontal or 3, 9 o'clock direction and the vertical or 6, 12 o'clock direction with respect to the optical axis which is normal to the LCD surface (see FIGURE 1).

2. Contrast measurements shall be made at viewing angle of Θ= 0 and at the center of the LCD surface. Luminance shall be measured with all pixels in the view field set first to white, then to the dark (black) state .
(see FIGURE 1) Luminance Contrast Ratio (CR) is defined mathematically.

$$CR = \frac{\text{Luminance when displaying a white raster}}{\text{Luminance when displaying a black raster}}$$

3. Center Luminance of white is defined as luminance values of 5 point average across the LCD surface. Luminance shall be measured with all pixels in the view field set first to white. This measurement shall be taken at the locations shown in FIGURE 2 for a total of the measurements per display.

4. The White luminance uniformity on LCD surface is then expressed as : ΔY =Minimum Luminance of 5(or 13) points / Maximum Luminance of 5(or 13) points.
(see FIGURE 2 and FIGURE 3).

5. The color chromaticity coordinates specified in Table 5 shall be calculated from the spectral data measured with all pixels first in red, green, blue and white. Measurements shall be made at the center of the panel.

6. The electro-optical response time measurements shall be made as FIGURE 4 by switching the "data" input signal ON and OFF. The times needed for the luminance to change from 10% to 90% is Tr, and 90% to 10% is Td.

7. Cross-Talk of one area of the LCD surface by another shall be measured by comparing the luminance (YA) of a 25mm diameter area, with all display pixels set to a gray level, to the luminance (YB) of that same area when any adjacent area is driven dark.
(See FIGURE 5).

4.3 Optical measurements

Figure 1. Measurement Set Up

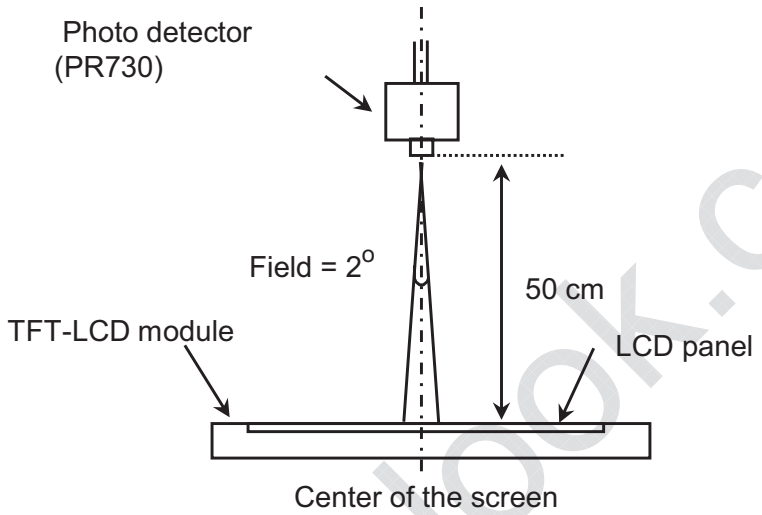

Optical characteristics measurement setup

Figure 2. White Luminance and Uniformity Measurement Locations (5 points)

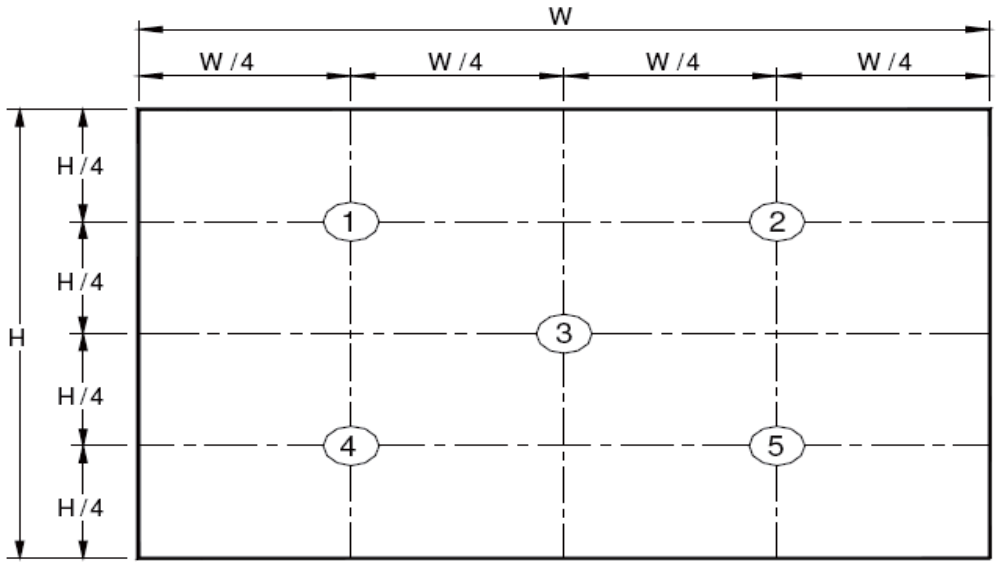

Center Luminance of white is defined as luminance values of center 5 points across the LCD surface. Luminance shall be measured with all pixels in the view field set first to white. This measurement shall be taken at the locations shown in FIGURE 2 for a total of the measurements per display.

Figure 3. Uniformity Measurement Locations (13 points)

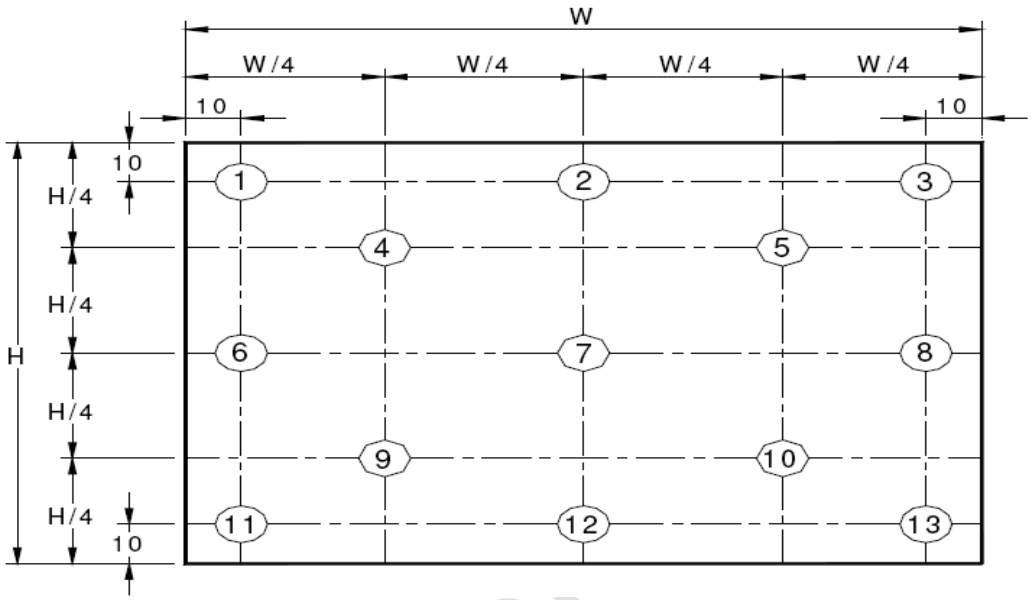

The White luminance uniformity on LCD surface is then expressed as : ΔY5 = Minimum Luminance of five points / Maximum Luminance of five points (see FIGURE 2) , ΔY13 = Minimum Luminance of 13 points /Maximum Luminance of 13 points (see FIGURE 3).

Figure 4. Response Time Testing

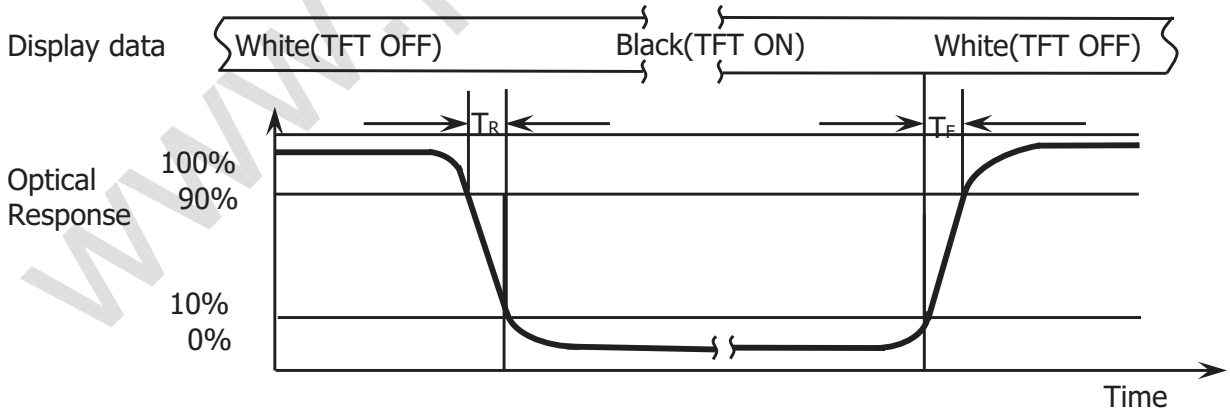

The electro-optical response time measurements shall be made as shown in FIGURE 4 by switching the “data” input signal ON and OFF. The times needed for the luminance to change from 10% to 90% is Td and 90% to 10% is Tr.

Figure 5. Cross Modulation Test Description

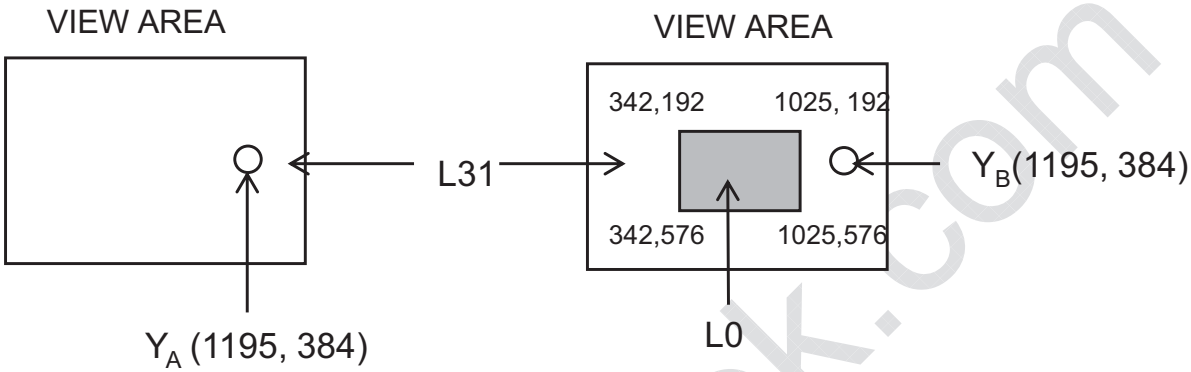

$$\text{Cross-Talk (\%)} = \left| \frac{Y_B - Y_A}{Y_A} \right| \times 100$$

Where:

Y_A = Initial luminance of measured area (cd/m^2)

Y_B = Subsequent luminance of measured area (cd/m^2)

The location measured will be exactly the same in both patterns

Cross-Talk of one area of the LCD surface by another shall be measured by comparing the luminance (YA) of a 25mm diameter area, with all display pixels set to a gray level, to the luminance (YB) of that same area when any adjacent area is driven dark (Refer to FIGURE 5).

5.0 INTERFACE CONNECTION.

5.1 Electrical Interface Connection

The electronics interface connector is UJU IS050-L30B-C10 or Compatible.
The connector interface pin assignments are listed in Table 6.

<Table 6. Pin Assignments for the Interface Connector>

Terminal	Symbol	Functions
Pin No.	Symbol	Description
1	CABC_ENABLE	Test enable
2	H_GND	Ground
3	LANE1_N	eDP RX channel 1 negative
4	LANE1_P	eDP RX channel 1 positive
5	H_GND	Ground
6	LANE0_N	eDP RX channel 0 negative
7	LANE0_P	eDP RX channel 0 positive
8	H_GND	Ground
9	AUX_CH_P	eDP AUX CH positive
10	AUX_CH_N	eDP AUX CH negative
11	H_GND	Ground
12	LCD_VCC	Power Supply, 3.3V (typ.)
13	LCD_VCC	Power Supply, 3.3V (typ.)
14	LCD_Self_Test	Panel self test enable
15	H_GND	Ground
16	H_GND	Ground
17	HPD	Hot plug detect output
18	BL_GND	LED Ground
19	BL_GND	LED Ground
20	BL_GND	LED Ground
21	BL_GND	LED Ground
22	BL_ENABLE	LED enable pin(+3.3V Input)
23	BL_PWM	System PWM Signal Input
24	Hsync	预留Hsync， 暂不开启
25	NC	No Connection
26	BL_POWER	LED Power Supply 5V-21V
27	BL_POWER	LED Power Supply 5V-21V
28	BL_POWER	LED Power Supply 5V-21V
29	BL_POWER	LED Power Supply 5V-21V
30	NC	No Connection

5-2. eDP Interface

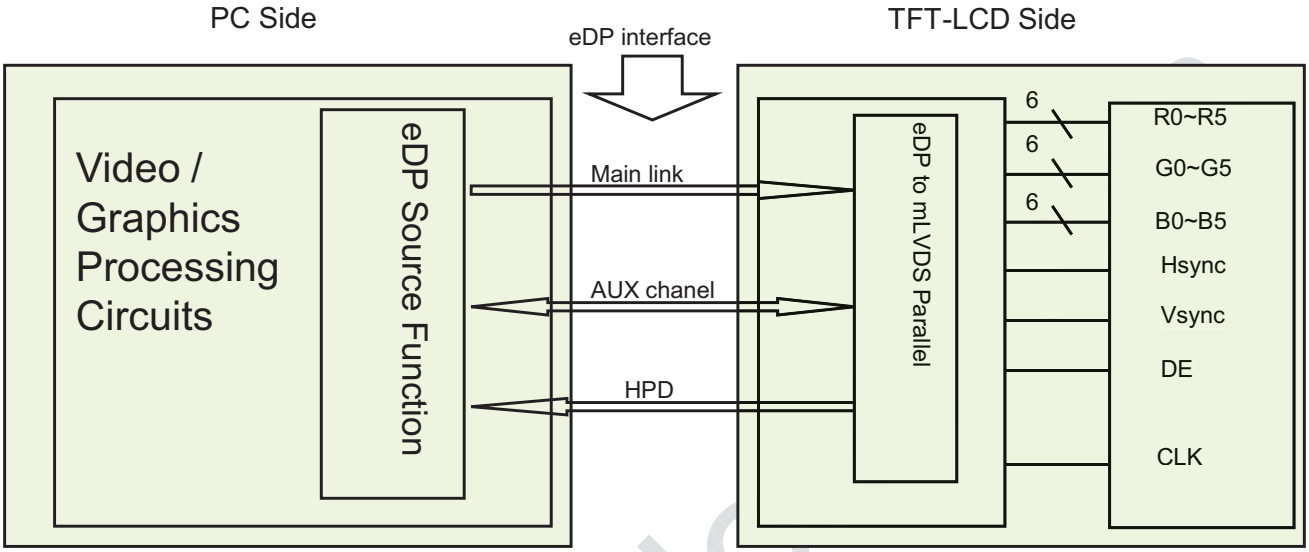

Note. Transmitter : NT71895QG or equivalent.
Transmitter is not contained in Module.

5.3.eDP Input signal

Lane 0	
R0-5:0	G0-5:4
G0-3.0	B0-5:2
B0-1:0	R1-5:0
G1-5:0	B1-5:4
B1-3:0	R2-5:2
R2-1:0	G2-5:0
B2-5:0	R3-5:4
R3-3:0	G3-5:2
G3-1:0	B3-5:0

5.4 Back-light & LCM Interface Connection

Interface Connector: **CRT F10401-1092**

<Table 7. Pin Assignments for the BLU & LCM Connector>

Pin No.	Symbol	Description	Pin No.	Symbol	Description
1	LED1	LED cathode connection	6	NC	No Connection
2	LED2	LED cathode connection	7	NC	No Connection
3	LED3	LED cathode connection	8	Vout	LED anode connection
4	LED4	LED cathode connection	9	Vout	LED anode connection
5	LED5	LED cathode connection	10	Vout	LED anode connection

6.0 SIGNAL TIMING SPECIFICATION

6.1 The NV156FHM-N41 is operated by the DE only.

Item		Symbols	Min	Typ	Max	Unit
Clock	Frequency	1/Tc	100	141.4	160	MHz
	High Time	Tch	-	4/7	-	Tc
	Low Time	Tcl	-	3/7	-	Tc
Frame Period		Tv	1090	1100	1238	lines
			-	60	-	Hz
			-	16.7	-	ms
Vertical Display Period		Tvd	-	1080	-	lines
One line Scanning Period		Th	2080	2142	2400	clocks
Horizontal Display Period		Thd	-	1920	-	clocks

Note※: This Module can support low frame refresh rate 50Hz & 40Hz.

6.2 eDP Rx Interface Timing Parameter

The specification of the eDP Rx interface timing parameter is shown in Table 8.

<Table 8. eDP Rx Interface Timing Specification>

Item	Symbol	Min	Typ	Max	Unit	Remark
Spread spectrum clock	ssc		0.5		%	
Differential peak-to-peak input voltage at package pins	$V_{RX-DIFFp-p}$	100	0	1320	mV	
Rx input DC common mode voltage	$V_{RX\_DC\_CM}$	-	GND	-	V	
Differential termination resistance	$R_{RX-DIFF}$	80	-	100	Ω	
Single-ended termination resistance	R_{RX-SE}	40	-	60	Ω	
Rx short circuit current limit	I_{RX_SHORT}	-	-	20	mA	
Intra-pair skew at Rx package pins (HBR) RX intra-pair skew tolerance at HBR	$L_{RX\_SKEW\_INTRA\_PAIR}$	-	-	150	ps	

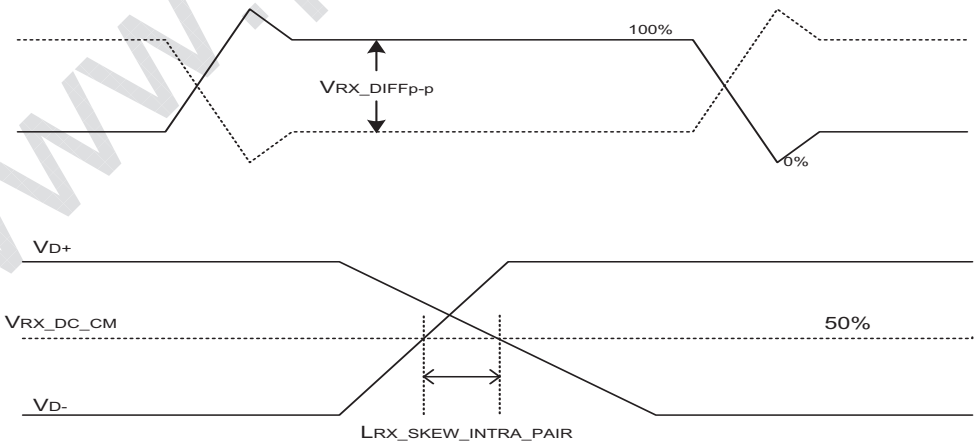

7.0 INPUT SIGNALS, BASIC DISPLAY COLORS & GRAY SCALE OF COLORS

	Colors & Gray scale	Data signal		
		R0 R1 R2 R3 R4 R5	G0 G1 G2 G3 G4 G5	B0 B1 B2 B3 B4 B5
Basic colors	Black	0 0 0 0 0 0	0 0 0 0 0 0	0 0 0 0 0 0
	Blue	0 0 0 0 0 0	0 0 0 0 0 0	1 1 1 1 1 1
	Green	0 0 0 0 0 0	1 1 1 1 1 1	0 0 0 0 0 0
	Light Blue	0 0 0 0 0 0	1 1 1 1 1 1	1 1 1 1 1 1
	Red	1 1 1 1 1 1	0 0 0 0 0 0	0 0 0 0 0 0
	Purple	1 1 1 1 1 1	0 0 0 0 0 0	1 1 1 1 1 1
	Yellow	1 1 1 1 1 1	1 1 1 1 1 1	0 0 0 0 0 0
	White	1 1 1 1 1 1	1 1 1 1 1 1	1 1 1 1 1 1
Gray scale of Red	Black	0 0 0 0 0 0	0 0 0 0 0 0	0 0 0 0 0 0
	△	1 0 0 0 0 0	0 0 0 0 0 0	0 0 0 0 0 0
	Darker	0 1 0 0 0 0	0 0 0 0 0 0	0 0 0 0 0 0
	△ ▽	↑ ↓	↑ ↓	↑ ↓
	Brighter	1 0 1 1 1 1	0 0 0 0 0 0	0 0 0 0 0 0
	▽	0 1 1 1 1 1	0 0 0 0 0 0	0 0 0 0 0 0
	Red	1 1 1 1 1 1	0 0 0 0 0 0	0 0 0 0 0 0
Gray scale of Green	Black	0 0 0 0 0 0	0 0 0 0 0 0	0 0 0 0 0 0
	△	0 0 0 0 0 0	1 0 0 0 0 0	0 0 0 0 0 0
	Darker	0 0 0 0 0 0	0 1 0 0 0 0	0 0 0 0 0 0
	△ ▽	↑ ↓	↑ ↓	↑ ↓
	Brighter	0 0 0 0 0 0	1 0 1 1 1 1	0 0 0 0 0 0
	▽	0 0 0 0 0 0	0 1 1 1 1 1	0 0 0 0 0 0
	Green	0 0 0 0 0 0	1 1 1 1 1 1	0 0 0 0 0 0
Gray scale of Blue	Black	0 0 0 0 0 0	0 0 0 0 0 0	0 0 0 0 0 0
	△	0 0 0 0 0 0	0 0 0 0 0 0	1 0 0 0 0 0
	Darker	0 0 0 0 0 0	0 0 0 0 0 0	0 1 0 0 0 0
	△ ▽	↑ ↓	↓ ↓	↑ ↓
	Brighter	0 0 0 0 0 0	0 0 0 0 0 0	1 0 1 1 1 1
	▽	0 0 0 0 0 0	0 0 0 0 0 0	0 1 1 1 1 1
	Blue	0 0 0 0 0 0	0 0 0 0 0 0	1 1 1 1 1 1
Gray scale of White & Black	Black	0 0 0 0 0 0	0 0 0 0 0 0	0 0 0 0 0 0
	△	1 0 0 0 0 0	1 0 0 0 0 0	1 0 0 0 0 0
	Darker	0 1 0 0 0 0	0 1 0 0 0 0	0 1 0 0 0 0
	▽	↑ ↓	↑ ↓	↑ ↓
	Brighter	1 0 1 1 1 1	1 0 1 1 1 1	1 0 1 1 1 1
	▽	0 1 1 1 1 1	0 1 1 1 1 1	0 1 1 1 1 1
	White	1 1 1 1 1 1	1 1 1 1 1 1	1 1 1 1 1 1

8.0 POWER SEQUENCE

To prevent a latch-up or DC operation of the LCD module, the power on/off seq uence shall be as shown in below

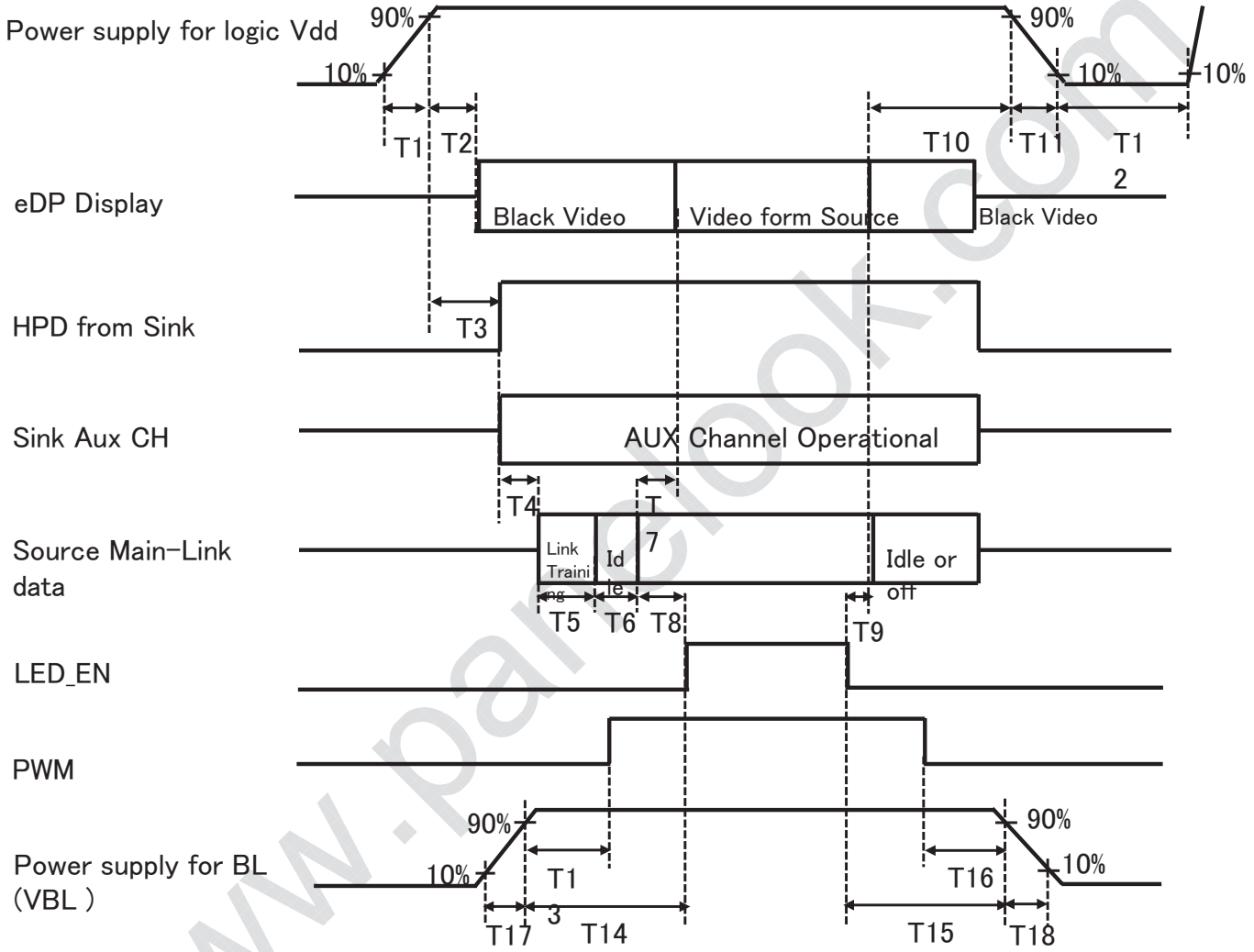

- 0.5ms ≤ T1 ≤ 10 ms
- 0ms ≤ T2 ≤ 200 ms
- 0ms ≤ T3 ≤ 200 ms
- 0ms ≤ T13
- 0ms ≤ T14
- 0ms ≤ T17
- 0ms ≤ T7 ≤ 50ms
- 0ms ≤ T10 ≤ 500 ms
- 0 ms ≤ T11 ≤ 10 ms
- 150ms ≤ T12
- 0ms ≤ T15
- 0ms ≤ T16
- 0ms ≤ T18

Notes:

1. When the power supply VDD is 0V, keep the level of input signals on the low or keep high impedance.
2. Do not keep the interface signal high impedance when power is on. Back Light must be turn on after power for logic and interface signal are valid.

9.0 Connector Description

Physical interface is described as for the connector on LCM.
These connectors are capable of accommodating the following signals and will be following components.

9.1 TFT LCD Module

Connector Name /Description	For Signal Connector
Manufacturer	UJU or Compatible
Type/ Part Number	IS050-L30B-C10 or Compatible
Mating housing/ Part Number	I-PEX 20454-030T or Compatible

10.0 MECHANICAL CHARACTERISTICS

10.1 Dimensional Requirements

FIGURE 6 shows mechanical outlines for the model NV156FHM-N41.
Other parameters are shown in Table 9.

<Table 9. Dimensional Parameters>

Parameter	Specification	Unit
Active Area	344.16 (H) ×193.59(V)	
Number of pixels	1920 (H) X 1080 (V) (1 pixel = R + G + B dots)	
Pixel pitch	0.17925 (H) X 0.17925 (V)	mm
Pixel arrangement	RGB Vertical stripe	
Display colors	262K	
Display mode	Normally Black	
Dimensional outline	359.5(H)*223.8(V) (W/PCB)*3.2(Max)	mm
Weight	380(Max)	gram
Back Light	Connector :CRT F10401-1092	
	LED, Horizontal-LED Array type	

10.2 Mounting

See FIGURE 6.

10.3 Anti-Glare and Polarizer Hardness.

The surface of the LCD has an AG coating to minimize reflection and a coating to reduce scratching.

10.4 Light Leakage

There shall not be visible light from the back-lighting system around the edges of the screen as seen from a distance 50cm from the screen with an overhead light level of 350lux.

11.0 RELIABILITY TEST

The Reliability test items and its conditions are shown in below.

<Table 10. Reliability test>

No	Test Items	Conditions
1	High temperature storage test	Ta = 60 ℃, 240 hrs
2	Low temperature storage test	Ta = -20 ℃, 240 hrs
3	High temperature & high humidity operation test	Ta = 50 ℃, 80%RH, 240 hrs
4	High temperature operation test	Ta = 50 ℃, 240 hrs
5	Low temperature operation test	Ta = 0 ℃, 240 hrs
6	Thermal shock	Ta = -20 ℃ ↔ 60 ℃ (0.5 hr), 100 cycle
7	Vibration test (non-operating)	1.5G, 10~500Hz,Half Sine X,Y,Z / Sweep rate : 1 hour
8	Shock test (non-operating)	220G, Half Sine Wave 2msec ±X,±Y,±Z Once for each direction
9	Electro-static discharge test (non-operating)	Air : 150 pF, 330Ω, 15 KV Contact : 150 pF, 330Ω, 8 KV

12.0 HANDLING & CAUTIONS

(1) Cautions when taking out the module
- Pick the pouch only, when taking out module from a shipping package.

(2) Cautions for handling the module
- As the electrostatic discharges may break the LCD module, handle the LCD module with care. Peel a protection sheet off from the LCD panel surface as slowly as possible.
- As the LCD panel and back - light element are made from fragile glass material, impulse and pressure to the LCD module should be avoided.
- As the surface of the polarizer is very soft and easily scratched, use a soft dry cloth without chemicals for cleaning.
- Do not pull the interface connector in or out while the LCD module is operating.
- Put the module display side down on a flat horizontal plane.
- Handle connectors and cables with care.

(3) Cautions for the operation
- When the module is operating, do not lose CLK, ENAB signals. If any one of these signals is lost, the LCD panel would be damaged.
- Obey the supply voltage sequence. If wrong sequence is applied, the module would be damaged.

(4) Cautions for the atmosphere
- Dew drop atmosphere should be avoided.
- Do not store and/or operate the LCD module in a high temperature and/or humidity atmosphere. Storage in an electro-conductive polymer packing pouch and under relatively low temperature atmosphere is recommended.

(5) Cautions for the module characteristics
- Do not apply fixed pattern data signal to the LCD module at product aging.
- Applying fixed pattern for a long time may cause image sticking.

(6) Other cautions
- Do not disassemble and/or re-assemble LCD module.
- Do not re-adjust variable resistor or switch etc.
- When returning the module for repair or etc., Please pack the module not to be broken. We recommend to use the original shipping packages.

13.0 LABEL

(1) MDL label

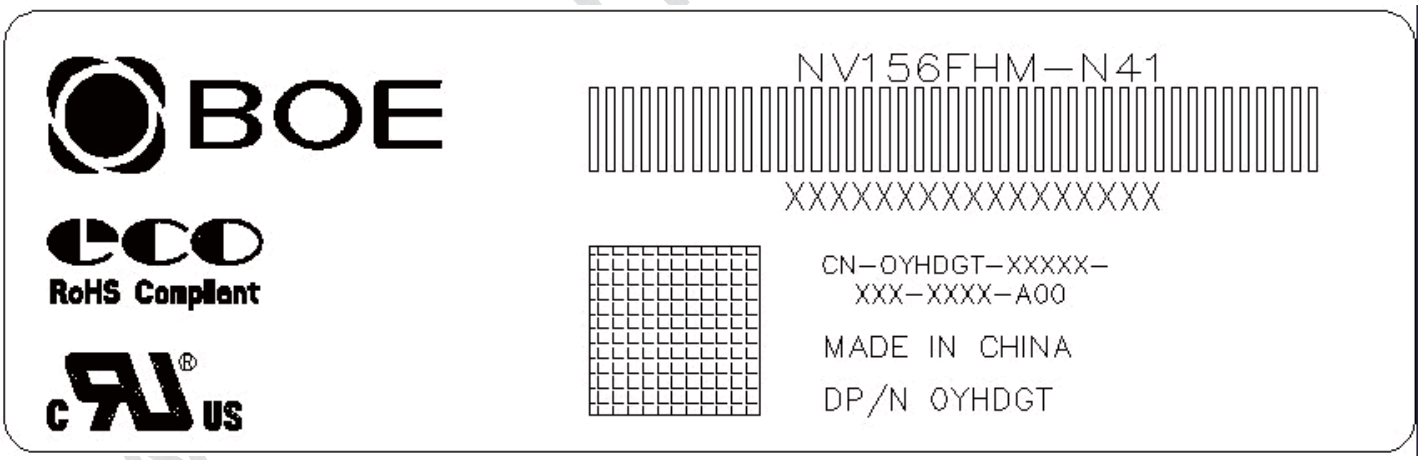

Digit / Code	1	2	3	4	5	6	7	8	9	10	11	12	13	14	15	16	17
Code	S	L	S	5	1	2	3	5	9	4	2	0	0	0	1	D	B
Description	Model Code /GBN		Grade	Line	Year		Month	Model Extension Code (Last 4 Digits Of FGCOD)				Serial No 00001-ZZZZZZ					

(2) High voltage caution label

	HIGH VOLTAGE CAUTION RISK OF ELECTRIC SHOCK. DISCONNECT THE ELECTRIC POWER BEFORE SERVICING	COLD CATHODE FLUORESCENT LAMP IN LCD PANEL CONTAINS A SMALL AMOUNT OF MERCURY. PLEASE FOLLOW LOCAL ORDINANCES OR REGULATIONS FOR DISPOSAL.

(3) Box label

Label Size: 110 mm (L) × 55 mm (W)
Contents
Model: NV156FHM-N41
Q`ty: Module Q`ty in one box
Serial No.: Box Serial No.
Date: Packing Date
Internal use of Product

Code \ Digit	1	2	3	4	5	6	7	8	9	10	11	12	13
Code	S	L	S	5	1	2	3	D	0	0	0	6	8
Description	Products GBN		Grade	Line	Year		Month	Revision Code	Serial No				

15.0 PACKING INFORMATION

15.1 Packing order

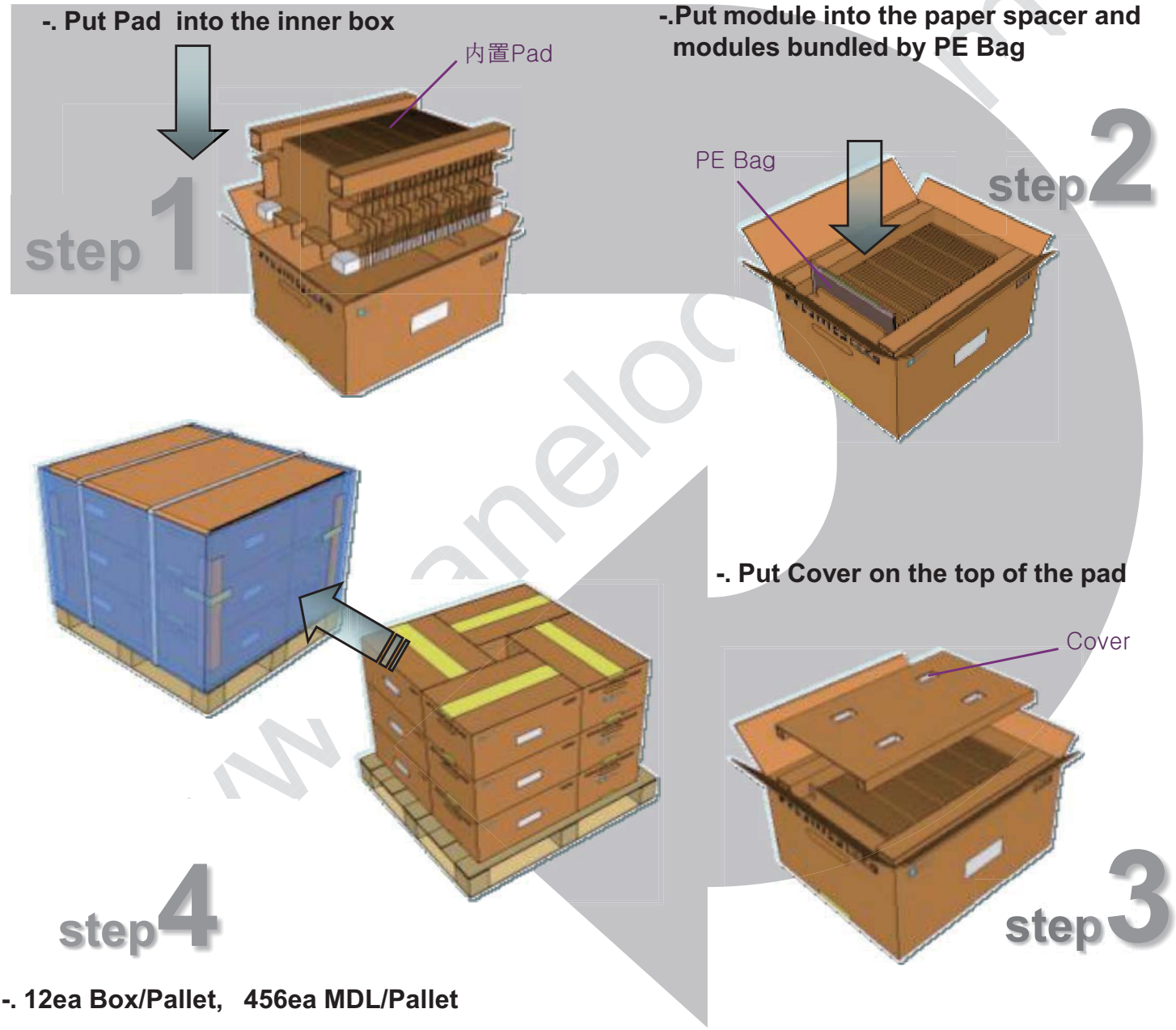

-. 12ea Box/Pallet, 456ea MDL/Pallet

15.2 Notes

- Box Dimension: 580mm×488mm×303mm
- Package Quantity in one Box:38 pcs
- Total Weight: 19.3kg/Box

16.0 MECHANICAL OUTLINE DIMENSION

Figure 6. TFT-LCD Module Outline Dimension (Front View)

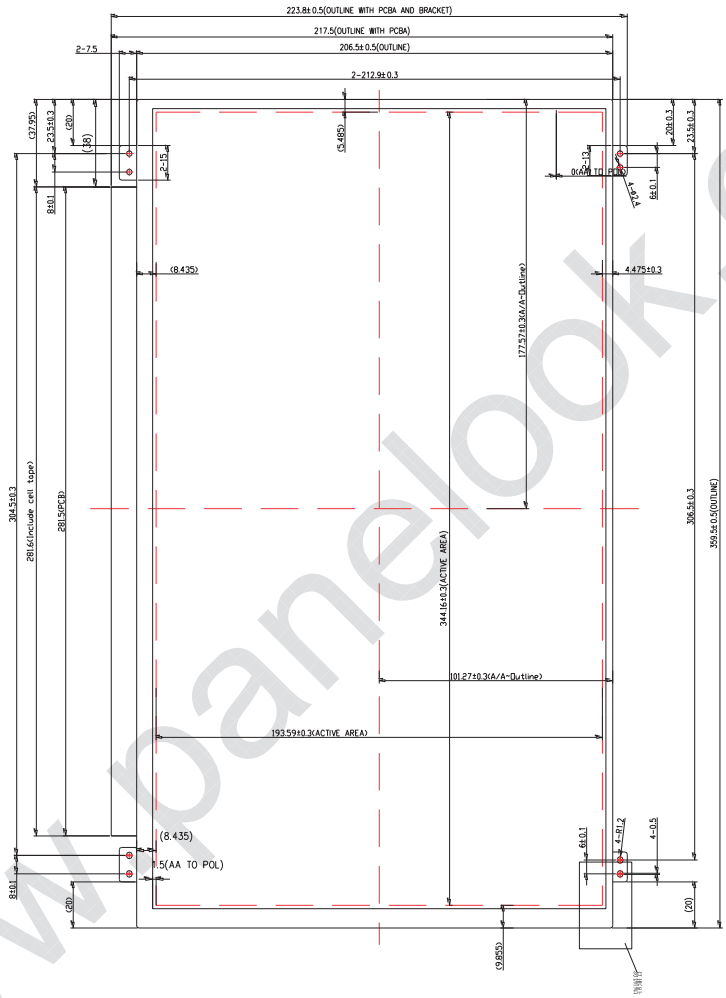

Figure 7. TFT-LCD Module Outline Dimensions (Rear view)

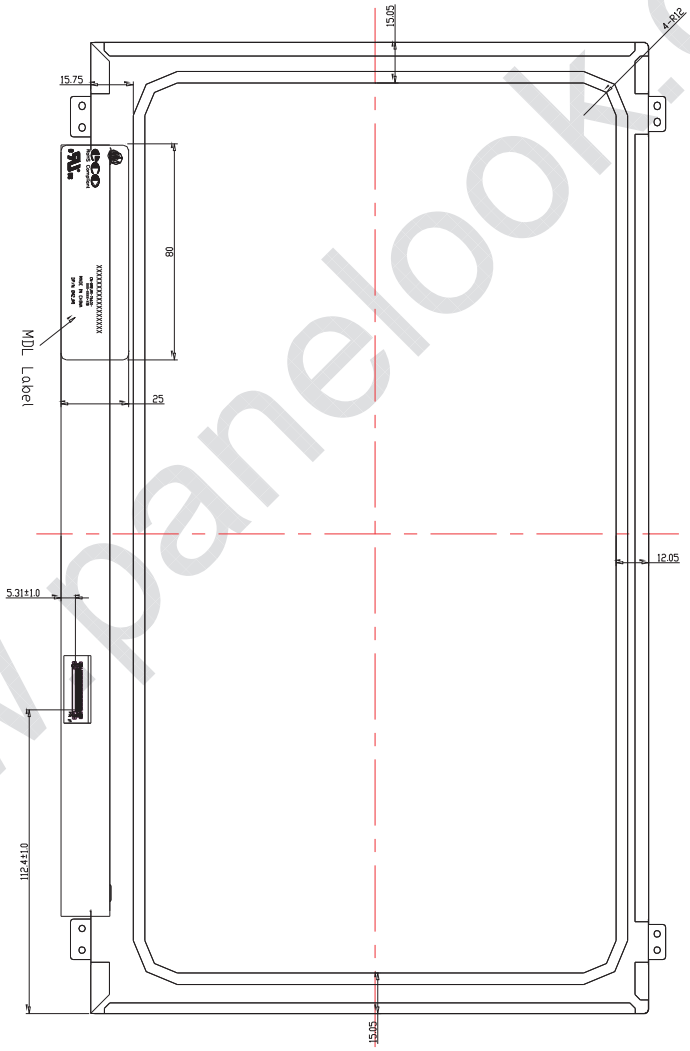

17.0 EDID Table

Address (HEX)	Function	Hex	Dec	crc	Input values.	Notes
00	Header	00	0		0	EDID Header
01		FF	255		255	
02		FF	255		255	
03		FF	255		255	
04		FF	255		255	
05		FF	255		255	
06		FF	255		255	
07		00	0		0	
08	ID Manufacturer Name	09	9		BOE	ID = BOE
09		E5	229			
0A	ID Product Code	2F	47		1583	ID = 1583
0B		06	6			
0C	32-bit serial No.	00	0			
0D		00	0			
0E		00	0			
0F		00	0			
10	Week of manufacture	1	1		1	
11	Year of Manufacture	19	25		2015	Manufactured in 2015
12	EDID Structure Ver.	01	1		1	EDID Ver 1.0
13	EDID revision #	04	4		4	EDID Rev. 0.4
14	Video input definition	95	149		-	
15	Max H image size	22	34		34	34 cm (Approx)
16	Max V image size	13	19		19	19 cm (Approx)
17	Display Gamma	78	120		2.2	Gamma curve = 2.2
18	Feature support	0A	10			RGB display, Preferred Timming mode
19	Red/Green low bits	24	36		-	Red / Green Low Bits
1A	Blue/White low bits	10	16		-	Blue / White Low Bits
1B	Red x high bits	97	151	604	0.59	Red (x) = 10010111 (0.59)
1C	Red y high bits	59	89	358	0.35	Red (y) = 01011001 (0.35)
1D	Green x high bits	54	84	337	0.33	Green (x) = 01010100 (0.33)
1E	Green y high bits	8E	142	568	0.555	Green (y) = 10001110 (0.555)
1F	Blue x high bits	27	39	156	0.153	Blue (x) = 00100111 (0.153)
20	BLue y high bits	1E	30	121	0.119	Blue (y) = 00011110 (0.119)
21	White x high bits	50	80	320	0.313	White (x) = 01010000 (0.313)
22	White y high bits	54	84	336	0.329	White (y) = 01010100 (0.329)
23	Established timing 1	00	0		-	
24	Established timing 2	00	0		-	

Address (HEX)	Function	Hex	Dec	crc	Input values.	Notes
25	Established timing 3	00	0		-	
26	Standard timing #1	01	1			Not Used
27		01	1			
28	Standard timing #2	01	1			Not Used
29		01	1			
2A	Standard timing #3	01	1			Not Used
2B		01	1			
2C	Standard timing #4	01	1			Not Used
2D		01	1			
2E	Standard timing #5	01	1			Not Used
2F		01	1			
30	Standard timing #6	01	1			Not Used
31		01	1			
32	Standard timing #7	01	1			Not Used
33		01	1			
34	Standard timing #8	01	1			Not Used
35		01	1			
36	Detailed timing/monitor descriptor #1	3C	60		141.40	141.4MHz Main clock
37		37	55			
38		80	128		1920	Hor Active = 1920
39		DE	222		222	Hor Blanking = 222
3A		70	112		-	4 bits of Hor. Active + 4 bits of Hor. Blanking
3B		38	56		1080	Ver Active = 768
3C		14	20		20	Ver Blanking = 20
3D		40	64		-	4 bits of Ver. Active + 4 bits of Ver. Blanking
3E		30	48		48	Hor Sync Offset = 48
3F		20	32		32	H Sync Pulse Width = 32
40		36	54		3	V sync Offset = 3 line
41		00	0		6	V Sync Pulse width : 6 line
42		58	88		344	Horizontal Image Size = 344 mm (Low 8 bits)
43		C2	194		194	Vertical Image Size = 194 mm (Low 8 bits)
44		10	16		-	4 bits of Hor Image Size + 4 bits of Ver Image Size
45		00	0		0	Hor Border (pixels)
46		00	0		0	Vertical Border (Lines)
47		1A	26			Refer to right table

Address (HEX)	Function	Hex	Dec	crc	Input values.	Notes
48	Detailed timing/monitor descriptor #2	30	48		113.12	113.12MHz Main clock
49		2C	44			
4A		80	128		1920	Hor Active = 1920
4B		DE	222		222	Hor Blanking = 222
4C		70	112		-	4 bits of Hor. Active + 4 bits of Hor. Blanking
4D		38	56		1080	Ver Active = 768
4E		14	20		20	Ver Blanking = 20
4F		40	64		-	4 bits of Ver. Active + 4 bits of Ver. Blanking
50		30	48		48	Hor Sync Offset = 48
51		20	32		32	H Sync Pulse Width = 32
52		36	54		3	V sync Offset = 3 line
53		00	0		6	V Sync Pulse width : 6 line
54		58	88		344	Horizontal Image Size = 344 mm (Low 8 bits)
55		C2	194		194	Vertical Image Size = 194 mm (Low 8 bits)
56		10	16		-	4 bits of Hor Image Size + 4 bits of Ver Image Size
57		00	0		0	Hor Border (pixels)
58		00	0		0	Vertical Border (Lines)
59		1A	26			
5A	Detailed timing/monitor descriptor #3	00	0			ASCII Data Sting Tag
5B		00	0			
5C		00	0			
5D		FE	254			
5E		00	0			
5F		59	89		Y	D/PN: YHDGT
60		48	72		H	
61		44	68		D	
62		47	71		G	
63		54	84		T	
64		80	128		10000000	EDID:A00
65		4E	78		N	BOE PN
66		56	86		V	
67		31	49		1	
68		35	53		5	
69		4E	78		N	
6A		34	52		4	
6B		31	49		1	

Address (HEX)	Function	Hex	Dec	crc	Input values.	Notes
6C	Detailed timing/monitor descriptor #4	00	0			Product Name Tag (ASCII)
6D		00	0			
6E		00	0			
6F		00	0			
70		00	0			
71		00	0		00000000	6-bit Color Depth & no FRC
72		41	65		01000001	WLED & singal light bar & one light bar
73		11	17		00010001	Frame rate 40Hz~65Hz
74		96	150		10010110	Light Controller:PWM & Max. Luminance 220
75		00	0		00000000	Front Surface:Anti-Glare& RGB v-stripe
76		00	0		00010000	with DBC
77		00	0		00000000	no Motion Blur & no Active Gamma
78		00	0		00000000	no Wireless Enhancement & no In-Cell Scanner
79		0A	10		00001010	2 Lane edp1.2
7A		01	1		00000001	Built-In Self Test
7B		0A	10			
7C		20	32			
7D		20	32			
7E	Extension flag	00	0			
7F	Checksum	6A	106	106	-	